87-205-15850

GEOLOGICAL BRANCH
ASSESSMENT REPORT

15,850

Operator: TWIN EAGLE RESOURCES INC

REPORT
on the
GOLD MOUNT CLAIM GROUP

LAWLESS CREEK AREA
SIMILKAMEEN MINING DIVISION

Owner(s): Monica Resources Ltd.
D. Jacorsky

NTS 92H/10W

N. Lat. 49° 33.2' ~~00"~~ W. Long. 120° ~~54'~~ 52.1' ~~00"~~

by

FILMED

LIEF CHRISTENSON, M.Sc.

STRATO GEOLOGICAL ENGINEERING LTD.
3566 KING GEORGE HIGHWAY
SURREY, BRITISH COLUMBIA
V4A 5B6

FEBRUARY 25, 1987

STRATO GEOLOGICAL ENGINEERING LTD.

SUMMARY

The Twin Eagle Resources Inc. Gold Mount claim group is located some 25 kilometers northwest of Princeton, British Columbia. The property is accessed by gravel road from Tulameen, B. C., or by a gravel road connecting to the Coquihalla Highway. The claim group is comprised of 10 claims for a total of 52 claim units.

The property is owned by Monica Resources Ltd. Twin Eagle Resources Inc. is the operator of a joint venture whereby Twin Eagle, Mt. Grant Mines Ltd., and Scorpion Resource Inc. each have the option to earn a 25% interest in the Gold Mount claim group.

Previous exploration programs between 1983 and March 1986 have concentrated on defining the structure and extent of the Rabbitt Mine vein system. This gold-mineralized quartz vein was mined during 1938 to 1941, producing some 1,000 ounces of gold.

The work performed for this report included 958 meters of diamond drilling, underground clearing and sampling of the Rabbitt Mine Number 2 Level, the collecting and assaying of a 6,640lb bulk sample of picked vein material, and the establishing of a survey grid totalling 27.3 line kilometers. Over this grid 595 soils were collected, and 25.9 kilometers of VLF-EM and 25.5

kilometers of magnetometer surveys were performed.

The drilling was undertaken to determine the lateral extent of the quartz veining, particularly the southwest vein inferred to be the main economic target (Uher and Dispirito, March 1986). The results show the veins to be very limited in size. The bulk sample, collected from the southwest vein to avoid the erratic nature of gold values from smaller samples, assayed 0.085 troy ounces per ton. Drilling to the north and southeast of the Rabbitt adit vein failed to locate significant veining in these areas. Therefore, furthur direct exploration of the Rabbitt vein system is not recommended at this time.

The recommendations include examining the area of quartz veining in the southwest grid area, adjacent to the Tulameen River Road, and to extend the geological mapping and sampling to include the Lawless Creek area.

Respectfully Submitted,
Strato Geological Engineering Ltd.

Lief Christenson

Lief Christenson, M. Sc.
Geologist

February 25, 1987.

STRATO GEOLOGICAL ENGINEERING LTD.

TABLE OF CONTENTS

1. INTRODUCTION . . . . . page 1

   1.1 Objectives . . . . . " 1
   1.2 Location, Access, Topography . . . . . " 2
   1.3 Operations and Communications . . . . . " 3
   1.4 Property Status . . . . . " 4

2. HISTORY AND REGIONAL EXPLORATION . . . . . " 6

3. GEOLOGY . . . . . " 9

   3.1 Regional Geology . . . . . " 9
   3.2 Property Geology . . . . . " 12

4. TRENCHING AND ROAD BUILDING . . . . . " 14

5. GEOPHYSICS . . . . . " 16

   5.1 Magnetometer Survey . . . . . " 16
   5.2 VLF-EM Survey . . . . . " 18

6. GEOCHEMISTRY . . . . . " 21

   6.1 Soil Sampling . . . . . " 21
   6.2 Rock Sampling . . . . . " 25

7. UNDERGROUND WORK . . . . . " 27

8. DIAMOND DRILLING . . . . . " 29

   8.1 Overview . . . . . " 29
   8.2 Results . . . . . " 32

9. CONCLUSIONS AND RECOMMENDATIONS . . . . . " 35

   9.1 Review . . . . . " 35
   9.2 Conclusions . . . . . " 36
   9.3 Recommendations . . . . . " 37

10. CERTIFICATE . . . . . " 39

11. REFERENCES . . . . . " 40

STRATO GEOLOGICAL ENGINEERING LTD.

LIST OF APPENDICES

Appendix I : A) Diamond Drill Core Logs
B) Diamond Drill Hole Sections

Appendix II : Geochemical Preparation and Analytical Procedures

Appendix III: A) Soils, Rock, and Diamond Drill Core Assay Certificates
B) Bulk Sample Concentration Method and Assay Certificate

Appendix IV : Histograms and Statistical Data for Cu, Pb, Zn, and Ni in Soils

Appendix V : Rock Sample Descriptions

Appendix VI : Time / Cost Distribution

LIST OF FIGURES

Figure 1:	Location Map	follows page 1
Figure 2:	Topographic Map	" 2
Figure 3:	Claim Map	" 3
Figure 4:	Regional Geology Map	" 11
Figure 5:	Air Photo Linears	" 11
Figure 6:	Diamond Drill Hole Plan Map . . .	leaflet
Figure 7:	Detail A, Trench Geology	follows page 15
Figure 8:	Detail B, Trench Geology	"
Figure 9:	Detail C, Trench Geology	"
Figure 10:	Detail D, Trench Geology	"
Figure 11:	Detail E, Trench Geology	"
Figure 12:	Detail F, Trench Geology	"
Figure 13:	Detail G, Trench Geology	"
Figure 14:	Detail H, Trench Geology	"
Figure 15:	Magnetic Data and Contour Map . .	leaflet
Figure 16:	VLF-EM Survey Profile Plots . . .	leaflet
Figure 17:	VLF-EM Survey Fraser Filter Contour Map	leaflet
Figure 18:	Soils Geochemistry Anomaly Map . .	leaflet
Figure 19:	Rabbitt Mine Underground Workings and Surface Trenching, Dated June, 1946.	leaflet
Figure 20:	Rabbitt Mine, Number 2 Level . .	leaflet

STRATO GEOLOGICAL ENGINEERING LTD.

1. INTRODUCTION

1.1 Objectives

Pursuant to a request by the Directors of Twin Eagle Resources, Inc., a mineral exploration program was undertaken during the Fall of 1986 over the Gold Mount claim group by Strato Geological Engineering Ltd. Twin Eagle Resources Inc. is the operator of a joint venture whereby Twin Eagle, Mt. Grant Mines Ltd., and Scorpion Resources Inc. each have the option to earn a 25% interest in the Gold Mount claim group.

The work performed included geophysical surveys and geological sampling over a concurrently established grid system; trenching and road building; diamond drilling; and opening and sampling of the lower Rabbitt Mine adit and haulageway. Additional geological sampling and mapping was completed over previously delineated geophysical and/or geological target areas.

The present examination was undertaken as a follow-up to previous exploration work on the claim group by Strato Geological personnel. The objective of this examination was to test the Rabbitt Mine quartz vein systems along strike and down-dip, confirm previously established geophysical and geochemical anomalies, and expand grid surveying beyond previous limits.

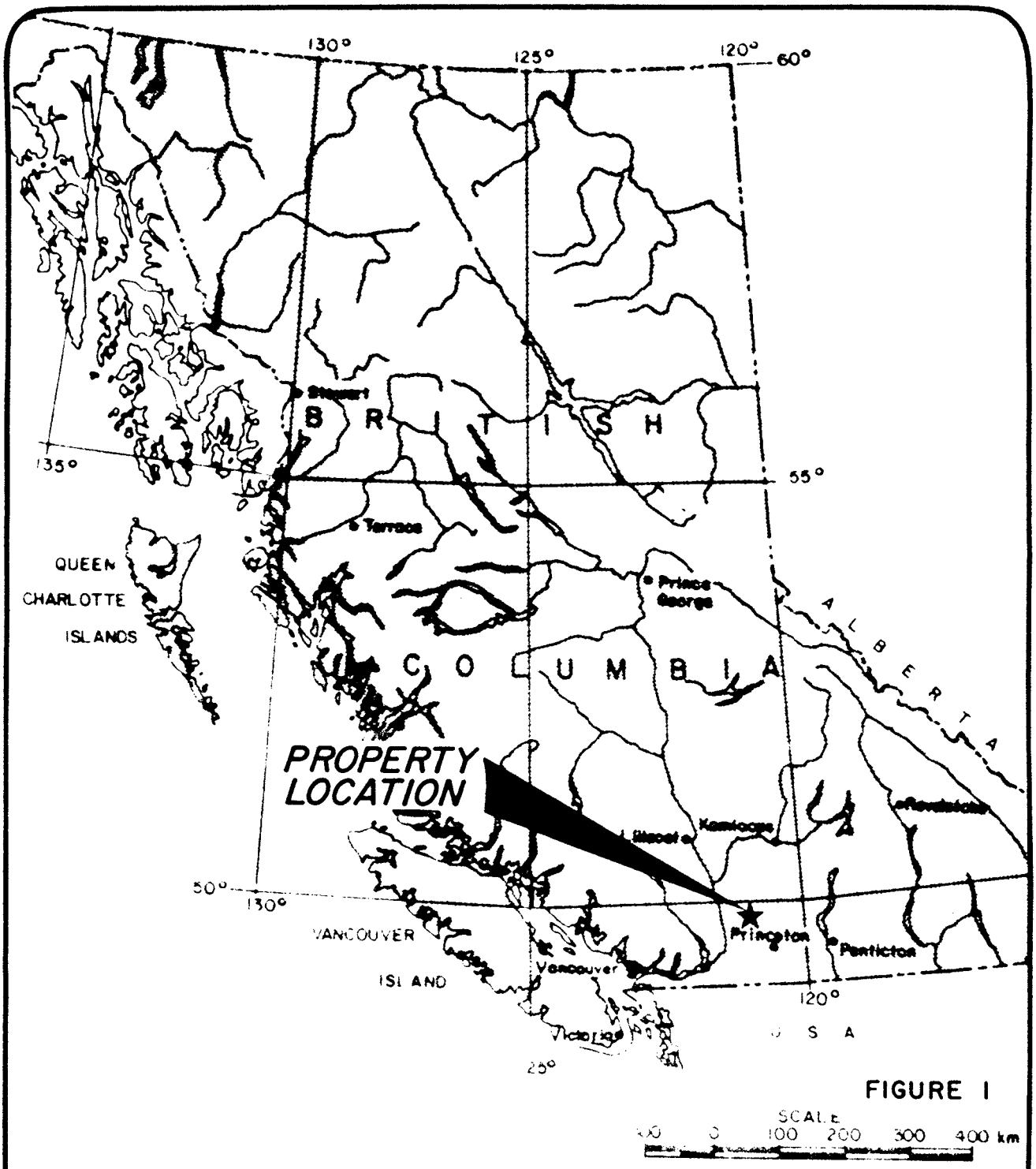

FIGURE I

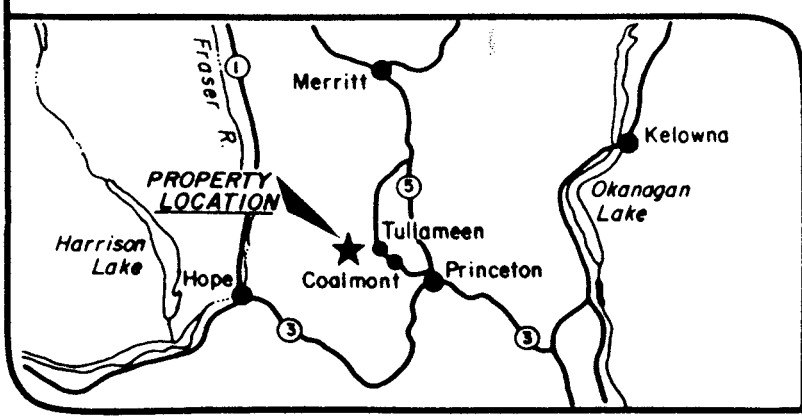

TWIN EAGLE RESOURCES INC.

GOLD MOUNT CLAIM GROUP

SIMILKAMEEN MD — NTS 92H/10W

LOCATION MAP

Date:
February, 1987

STRATO GEOLOGICAL ENGINEERING LTD.

This report presents the results of the Fall, 1986 exploration program, and incorporates the results of the previous exploration work.

1.2 Location, Access, Topography

(See Figures 1 and 2).

The Gold Mount claim group is located in the Similkameen Mining Division (92H/10W), approximately 25 kilometers northwest of the town of Princeton, in the southern interior of British Columbia.

The claim group is located on the northeast slopes of Grasshopper Mountain on the north side of the Tulameen River. The property is centered at approximately 49 degrees 33' 00" North Latitude and 120 degrees 54' 00" West Longitude.

Access to the property is from Tulameen, B. C., by the Lawless Creek Road or the Bear Creek Road, a road distance of approximately 26 and 11 kilometers respectively. Access is also available from the Coquihalla Highway via the Tulameen River Road, a distance of 16 kilometers. A four-wheel drive vehicle is recommended.

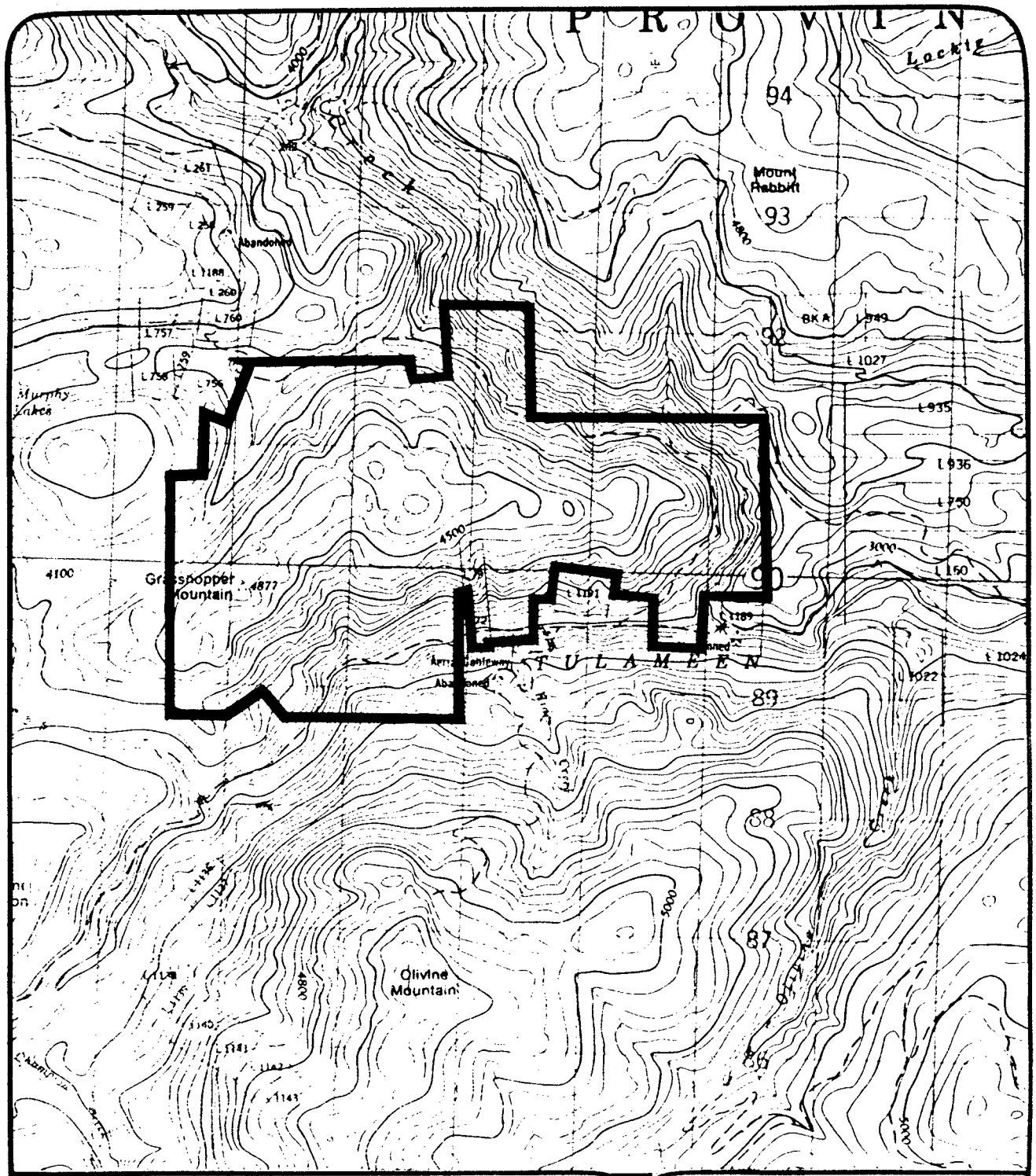

SIMILKAMEEN M.D. — NTS 92H/10

FIGURE 2

TWIN EAGLE RESOURCES INC.

TOPOGRAPHIC MAP

0 1000 m

Date:
February, 1987

STRATO GEOLOGICAL ENGINEERING LTD.

The property ranges in elevation from approximately 850 to 1400 meters above sea level. The Lawless Creek canyon in the eastern portion of the claim group is steep and difficult to access.

Stands of marketable timber cover the claim group.

1.3 Operations and Communications

The field crews were lodged in Coalmont, British Columbia, and commuted daily to the property.

Daily telephone communications were maintained with the office in Surrey, British Columbia.

Three 4WD vehicles and one 2WD truck belonging to Strato Geological Engineering Ltd. were used on the property. In addition, snowmobiles were rented from Rob Soderstrom and Ed Reichert, both of Tulameen, B. C.

A D8 bulldozer, rented from J.E. Equipment Rentals Ltd., Mt. Lehman, B. C. and operated by Ron Pengelly of Abbotsford, B. C., was used to construct drill access roads and trench mineralized areas. A JD-4 bulldozer, owned and operated by the drilling contractors (Four Star Drilling Ltd. of Abbotsford, B.C.), was

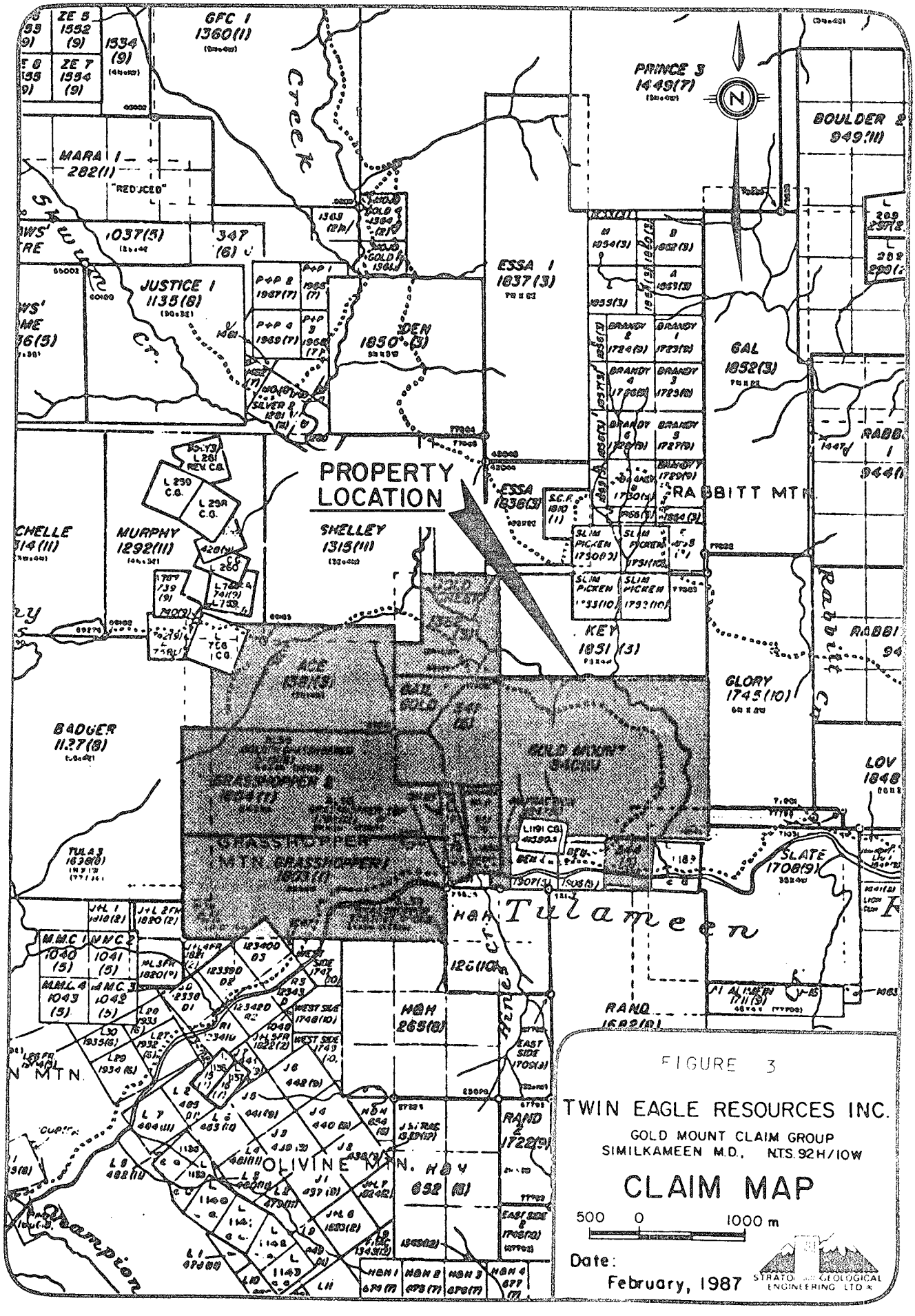

FIGURE 3

TWIN EAGLE RESOURCES INC.

GOLD MOUNT CLAIM GROUP
SIMILKAMEEN M.D., N.T.S. 92H/10W

CLAIM MAP

500 0 1000 m

Date:
February, 1987

STRATO GEOLOGICAL ENGINEERING LTD.

used to plow snow, move the drill, and construct drill sites. A rubber-tired backhoe owned and operated by W. A. Blows of Princeton, B. C. was used to clear the portal to the lower Rabbitt Mine haulage.

The work was performed under the supervision of L. Christenson (M.Sc., Geologist). Five additional geologists and five field assistants were involved in this study, however, a number of these were used for specific projects of short duration - i.e., surveying, underground mapping, logistical support, and assisting core logging. Personnel and time involved are listed in Appendix VI.

1.4 Property Status

Ten mineral claims, totaling 52 units, comprise the Gold Mount Claim group. The property is owned by Monica Resources Ltd.

Twin Eagle Resources Inc., Mt. Grant Mines Ltd., and Scorpion Resources Inc. each have the option to earn a 25% interest in the property by spending 33.3% of $400,000 exploration expenditures prior to December 31, 1990. As well, the six western units of the Grasshopper 1 and Grasshopper 2 claims are under option to Newmount Exploration of Canada.

The claims are situated in the Similkameen Mining Division. Information from the Gold Commissioners office in Princeton, B.C. is as follows:

CLAIM NAME	UNITS	RECORD NO.	EXPIRY DATE
Gold Mount	12	340 (5)	May 8, 1989
Gail Gold	4	341 (5)	May 8, 1989
Weldonna	1	344 (5)	May 8, 1989
Bonanza Gold	1	533 (5)	May 11, 1989
Bonanza-Queen and Nevada	1	511 (2)	Feb. 12, 1989
Ace	8	1381 (3)	March 16, 1989
Gold Creek	4	1382 (3)	March 16, 1989
Au Fraction	1	1947 (6)	June 15, 1989
Grasshopper 1	10	1803 (1)	Jan. 10, 1988
Grasshopper 2	10	1804 (1)	Jan. 10, 1988

Claim posts and claim boundaries had been previously established and were not examined during the present exploration program. The claims are contiguous and are shown on British Columbia Mineral Titles Map M-92H/10W (Figure 3).

2. HISTORY AND REGIONAL EXPLORATION

The Tulameen River - Lawless Creek area was first explored in the 1880's. Placer mining operations in the Tulameen River and its tributaries have recovered significant, but largely unrecorded, amounts of gold and platinum. The majority of work on lode deposits in the area has centered on Law's Camp and the Rabbitt and El Alemein Mines. The combined production from these three areas, as reported in the Minister of Mines Report, 1960, is 1,288 ounces gold, 1,075 ounces silver, and 869 pounds copper.

The Rabbitt Mine, located within the Gail Gold claim (Figure 3), was located in 1938 by the Rabbitt Brothers. Veins of glassy quartz with free gold, chalcopyrite, pyrite, galena, and sphalerite were mined between 1938 and 1940. About 1,000 ounces of gold were recovered; the reported average grade was 0.68 oz. gold/ton and 0.38 oz. silver/ton. The veins occur within Nicola Group volcanic rocks.

During October and November 1983, Monica Resources Ltd. completed a program of surface prospecting, geochemical soil sampling, geophysical surveying and 146 meters of diamond drilling in three holes in the immediate area of the Rabbitt Mine. Significant gold assays from chip samples of quartz veins and from one diamond drill intersection were reported (Tully,

December 1983). In 1984, Monica Resources extended prospecting, mapping and soil sampling as well as blasting and trenching to extend the Rabbitt Mine vein to the southwest (Wares August, 1984).

During October and November 1985 Monica Resources completed a reconnaissance program of geological mapping, geophysics and geochemical soil and rock sampling over the Grasshopper 1 and Grasshopper 2 claims (Pawliuk, December 1985).

During January 1986 a horizontal loop electromagnetic survey was performed over the Gail Gold claim. In addition, between January and March, 1986, Monica Resources completed approximately 1500 meters of diamond drilling in the immediate area of the former Rabbitt Mine (Uher and DiSpirito, March 20, 1986). The results of the 1986 drilling are summarized in the section on drilling.

A regional airborne magnetometer and VLF-EM survey was undertaken over the Gold Mount property and the surrounding area September 22nd to October 4th, 1986 (Hunter and Englund, 1986).

The area surrounding the Gold Mount claim group has been the target of active exploration in recent years. Newmont Exploration of Canada Ltd., is currently conducting magnetometer,

geological, and geochemical surveys on the Grasshopper 1 and 2 claims, on the western portion of Grasshopper Mountain, in a search for platinum lode deposits. The Den claims, 1 kilometer north of the Gold Mount property, are currently being investigated by Fortress Resources Inc. by geological, geochemical, and geophysical surveys. The Glory claim group, which borders the Gold Mount claims to the East, is also the focus of geological, geochemical, and geophysical surveys being undertaken for Paradise Resources Inc. The Brandy claim group, which borders the Gold Mount property to the north, is undergoing a similar exploration program undertaken by Black Knight Resources Inc.

3. GEOLOGY

3.1 Regional Geology

The geology of the Lawless Creek area has been described in a number of government reports (BCDM 1960, Geol. Surv. of Canada Memoir #243). Rock units of the area include (Figure 4):

a) The Triassic volcanic and subordinate sedimentary rocks of the Nicola Group. The majority of the Nicola Group rocks in the area are probably andesitic in composition. They include lavas, flow breccias and pyroclastics. Interbedded with these volcanics are bands and lenses of dacite, rhyolite, fine grained dark sediments, sedimentary schists, limestones and minor conglomerates. These rocks outcrop on both sides of Lawless Creek, and underlie the majority of the Gold Mount claim group. These are the oldest rocks found in the area, and are thought to represent an intra-oceanic volcanic arc, metamorphosed to the greenschist facies (Monger, 1985). The metamorphism has caused the ubiquitous green coloration found in the rocks of the Nicola Group.

b) The Late Triassic Tulameen Ultramafic Complex. The complex consists of a central core of dunite concentrically rimmed by pyroxenites, syenites, and gabbroic rocks. The main body

of the complex is exposed as a northwesterly trending ellipsoid lying between Badger Creek and the north slope of Grasshopper Mountain. The complex intrudes the surrrounding Nicola Group. Recent geological and geochemical investigations by the Geological Survey of Canada has led to the belief that the Tulameen Complex is a magmatic differentiate of the Nicola volcanics (J. Monger, 1986, pers.comm.) The Tulameen Complex has long been considered to be the source of the platiniferous placer deposits found in the area (Findlay, 1969).

c) The Lower Cretaceous Eagle Granodiorite. This is a member of the Coast Range intrusions. The granodiorite is exposed in an elongated northeast-southwest direction just west of the margin of the Tulameen Complex. Rice (1960) stated that the Eagle Granodiorite was intruded along the bedding of the Nicola Group.

d) The Upper Cretaceous or early Tertiary Otter Intrusions. This unit is found mostly on the east side of Otter Creek Valley north of Tulameen. The Otter Intrusions are commonly composed of red granite, with some grey granites and feldspar porphyry sills and dykes also exposed.

The structural pattern of the Lawless Creek area is complex and poorly understood. The Nicola Group has been folded, intruded, and faulted subsequent to deposition, and few structural trends can be traced for significant distances.

Rice (1960) listed three periods of folding recorded in rocks of the area: before Lower Cretaceous, Lower Cretaceous to Lower Miocene, and post-Lower Miocene time. Eastward-directed compression has resulted in folds with north-south fold axes. Faulting has followed the general direction of these fold axes in the area of the Brandy claims and Grasshopper Mountain. Linears observed from air photographs indicate a possible conjugate shear system trending northerly from the Tulameen River to north of Mt. Rabbitt (Figure 5).

From regional studies, it has been noted that foliation within the Nicola Group becomes more pronounced going westerly from the town of Tulameen towards the contact of the Eagle Granodiorite (Monger, 1986, pers.comm.). East of Lawless Creek rock foliation is incoherent. West of Lawless Creek, a generally north-westerly moderately to steeply-dipping foliation trend is discernable. This attitude parallels the contact of the Eagle Granodiorite and is also parallel to the bedding of the Nicola Group rocks. Rice (1960) inferred that the Eagle Granodiorite

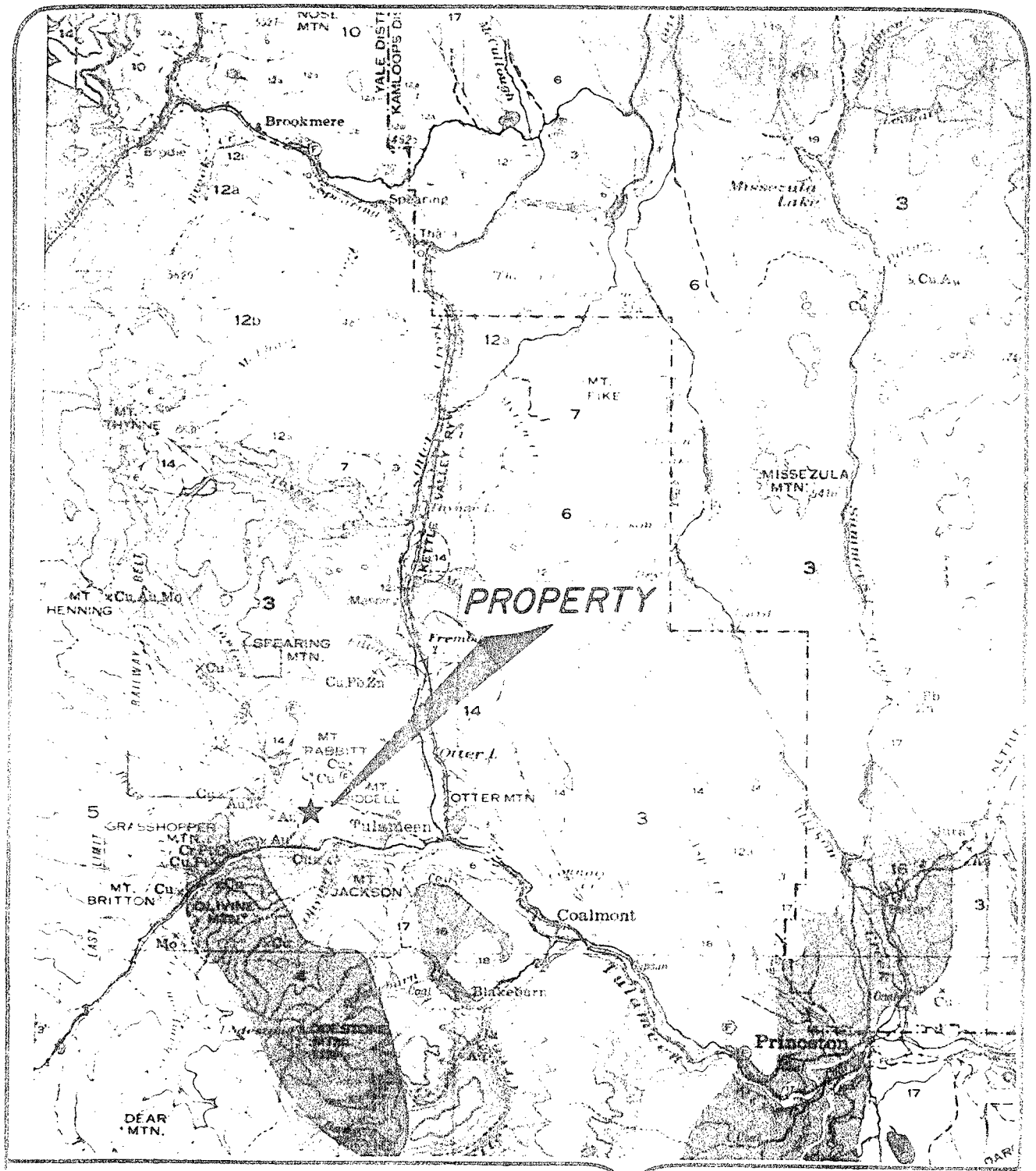

LEGEND

18	Basalt	4	Peridotite, pyroxenite, gabbro
16,17	Princeton Group	3	Nicola Group
14	Otter Intrusions		
12a-b	Kingsvale Group		
10	Spence Bridge Group		
8	Copper Mt. Intrusions		
5,6,7	Coast Intrusions		

After H.M.A. RICE, 1944

FIGURE 4

TWIN EAGLE RESOURCES INC.

GOLD MOUNT CLAIM GROUP

SIMILKAMEEN MD — NTS 92H/10W

REGIONAL GEOLOGY MAP

Date:
February, 1987

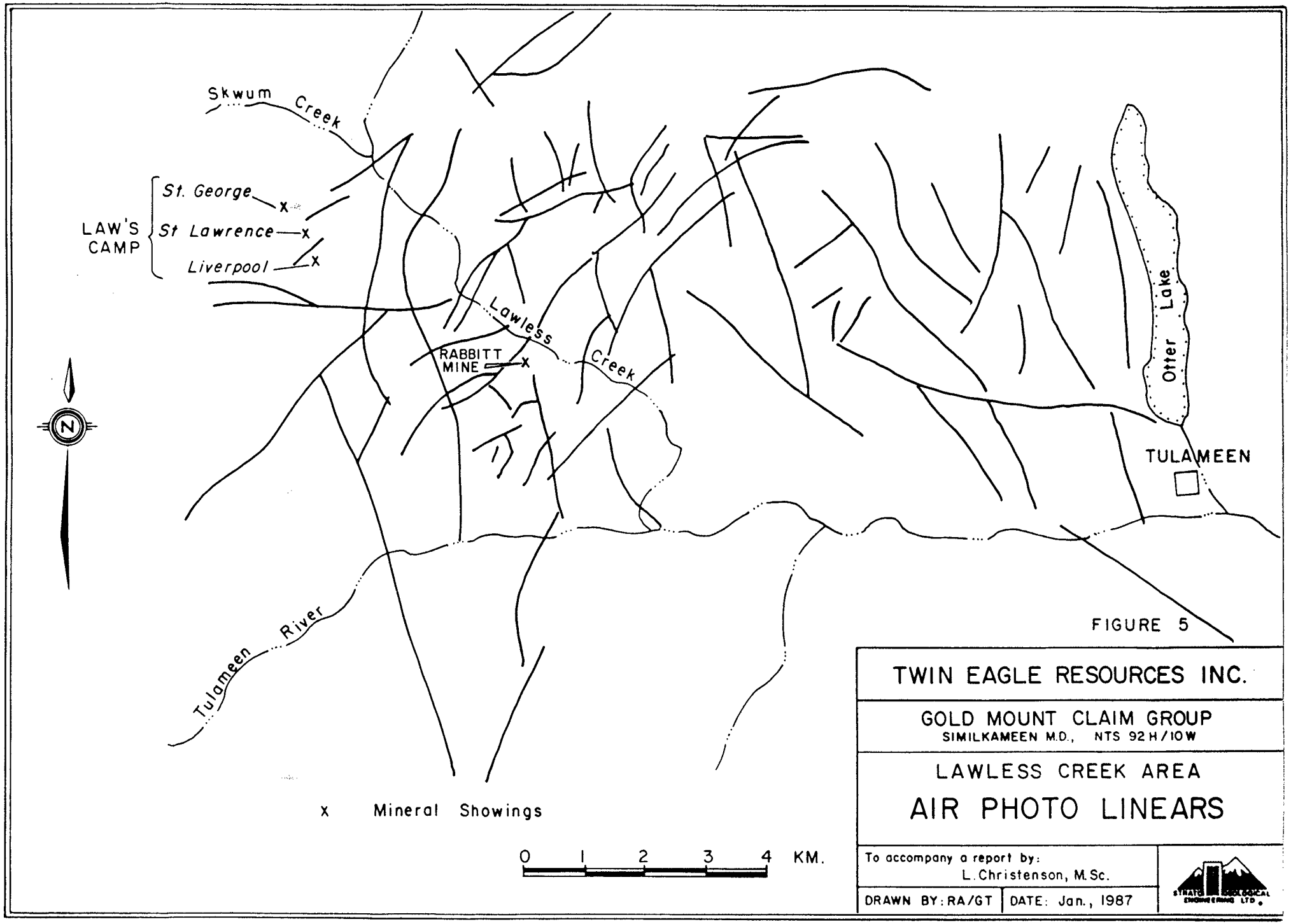
Skwum Creek
LAW'S CAMP
St. George
St Lawrence
Liverpool
Lawless Creek
RABBITT MINE
Otter Lake
TULAMEEN
Tulameen River
N
x Mineral Showings
0 1 2 3 4 KM.
FIGURE 5
TWIN EAGLE RESOURCES INC.
GOLD MOUNT CLAIM GROUP
SIMILKAMEEN M.D., NTS 92H/10W
LAWLESS CREEK AREA
AIR PHOTO LINEARS
To accompany a report by:
L. Christenson, M.Sc.
DRAWN BY: RA/GT
DATE: Jan., 1987

may have been formed as a product of granitization of the Nicola Group. The prominent foliation and bedding in the area of Grasshopper Mountain is in line with quartz veining and VLF-EM conductive zones mapped by Strato Geological Engineering personnel.

3.2 Property Geology

An extensive early snow cover restricted the bulk of the geological mapping to road cuts and drill core. More complete geologic mapping of the Gold Mount claim group has been previously presented by Strato Geological Engineering Ltd. (Wares, August, 1984, Pawliuk, December, 1985). This section serves to summarize the previous findings and includes data collected during the Fall 1986 work program.

The geologic map produced by Wares (August, 1984) defines three major rock types present on the Gold Mount claim group, with each joined by generally north-westerly trending contacts. Pyroxenites of the Tulameen Ultramafic Complex occur to the southwest, sediments (predominantly graphitic argillites) of the Nicola Group occur in the northeast, and a central wedge of Nicola Group volcanics and volcaniclastics lies in the center. The quartz veins of the Rabbitt Mine have developed within the volcanic/volcaniclastic unit.

Wares (August, 1984) drew the argillite-volcanic contact to the east of 4+50E on the grid system. The VLF-FM survey and drilling undertaken for this report show the contact to run closer to 1+00E, and that the argillitic unit is interbedded with Nicola volcanics.

Two prominent quartz veins exist at the locality of the Rabbit Mine. The adit vein trends generally north-south and was mostly removed by mining prior to 1941. At the southern terminus of a stope, mined to surface, a southwest (225 degrees) trending vein abuts the north-south vein (open stope shown on Figures 6 and 19). This southwest vein is up to 1m wide in the open stope, and contains abundant sulfide mineralization. Tracing the vein has been the focus of past exploration programs.

4. TRENCHING AND ROAD BUILDING

In order to trace the Rabbitt vein systems along strike, and to facilitate access for drilling and sampling, the existing road system was expanded and areas of alteration were trenched. It was decided to connect the drill road system to a logging clearcut to the west to provide an easier access route than the Grasshopper Creek Road. A total of 1.5Km of new road was constructed.

The southwesterly extension of the Rabbitt vein system was traced for approximately 175 meters along strike by a series of trenches (Figure 6). The vein was traced by the alteration envelope which characterizes the mineralization. A total of 140m of trenching was completed, and each trench was mapped and sampled in detail (Details A-E, figures 7-14).

These five trenches primarily expose volcanics and volcaniclastics of the Nicola Group. Assay results are generally low; the highest gold values were obtained from the trench presented as Detail B (Figure 8), where samples collected across several zones of 2-12cm wide quartz veinlets returned gold values up to 490ppb.

Three additional road cuts along the Grasshopper Creek - Rabbitt Mine Road were mapped and sampled in detail. Two of these, presented as Details F and G (Figures 12 and 13, location shown on Figure 6), tested the possible northerly extension of the Rabbitt vein system. Both of these cuts expose iron-stained, sheared andesites of the Nicola Group volcanics, with locally abundant, fine-grained pyrite. Assay results from these cuts do not reveal any significant enrichment of gold, silver, or base metals.

The third cut mapped along the mine road, presented as Detail H (Figure 14, location shown on Figure 18), tested sheared, iron-stained andesites with locally abundant pyrite and areas of quartz veining and silicification. This alteration is adjacent to a major fault delineated by the VLF-EM survey (Section 5.2, this report). Significant asssay results were not obtained from this area.

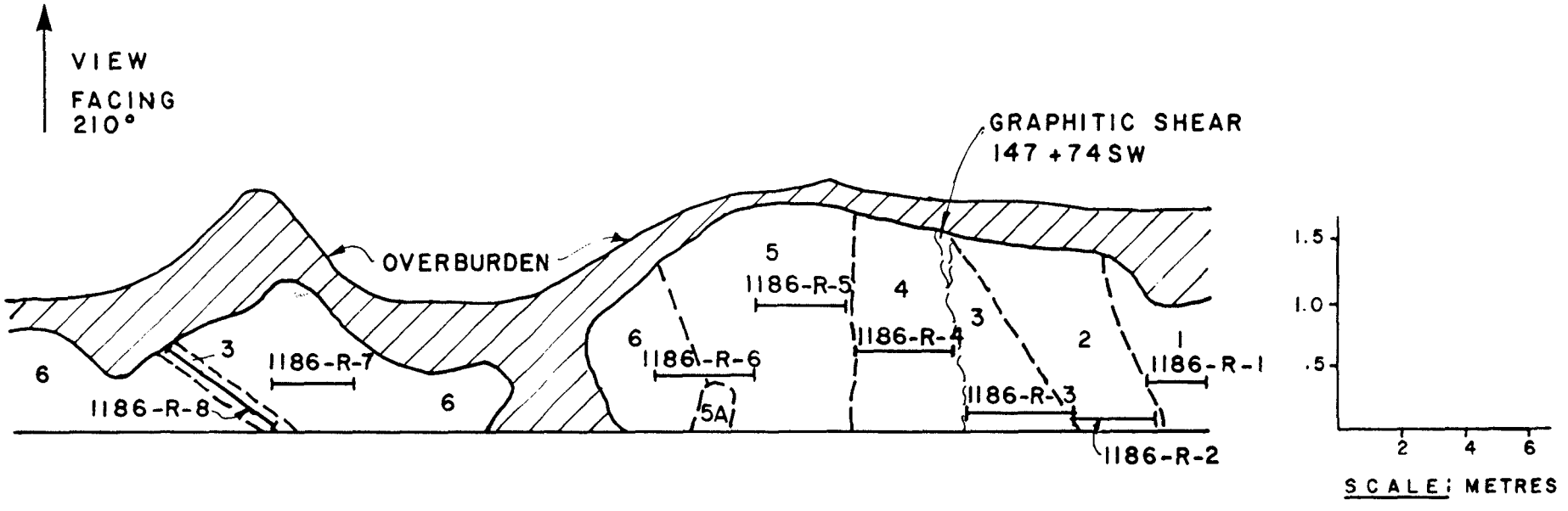

ROAD CUT SECTION

LEGEND

1 LIMONITE STAINED ROCK CHIPS, UNCONSOLIDATED
2 VOLCANIC ARENITE
3 GRAPHITIC ARGILLITE WITH PYRITE
4 INTERBEDDED ZONE OF ARGILLITE, SILTSTONE & VOLCANIC ARENITE
5 VOLCANIC ARENITE
5A VOLCANIC ARENITE WITH FE OXIDE STAINING
6 ANDESITE
1186-R-4 ROCK SAMPLE LOCALITY
147+74 SW SHEAR ZONE SHOWING ATTITUDE
GEOLOGIC CONTACT

FIGURE 7

TWIN EAGLE RESOURCES INC.

GOLD MOUNT CLAIM GROUP
SIMILKAMEEN M.D., — NTS 92-H/10W

DETAIL A

To accompany a report by:
L. Christenson, M.Sc

Drawn by: CN LC GW
Date January 1987

STRATO GEOLOGICAL ENGINEERING LTD.

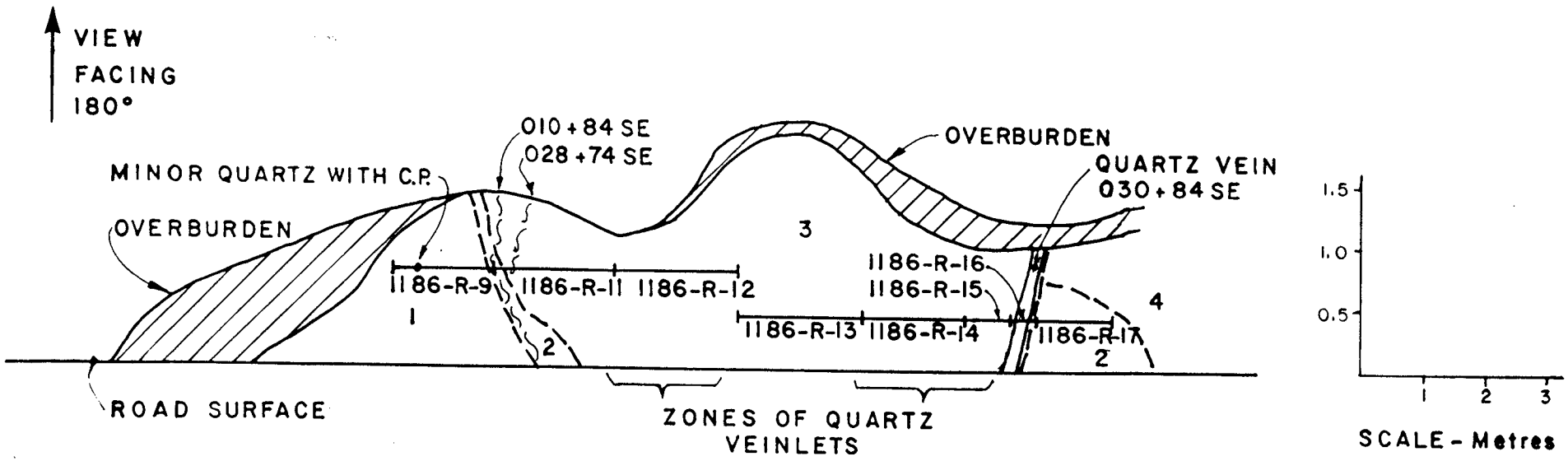

ROAD CUT SECTION

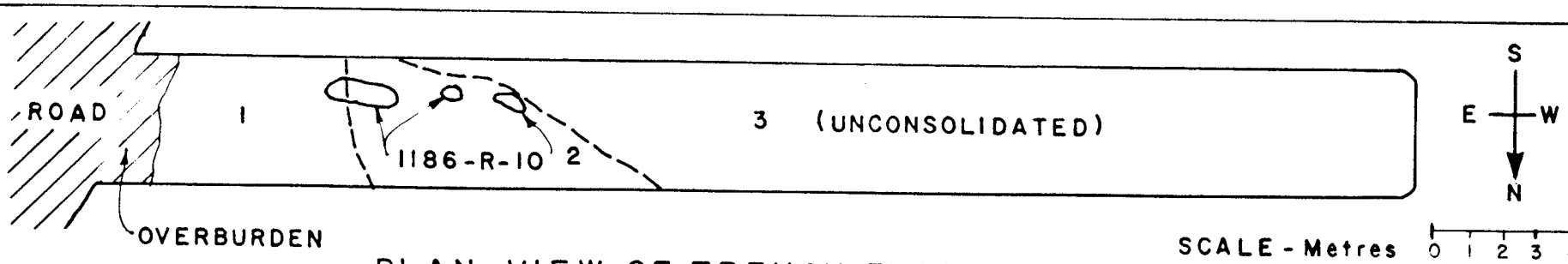

PLAN VIEW OF TRENCH FLOOR

FIGURE 8

LEGEND

1 ANDESITE
2 BLEACHED VOLCANICS WITH ± 10% PY. - LOCALLY LIMONITE STAINED
3 GRAPHITIC ARGILLITE WITH QUARTZ VEINLETS
4 ANDESITE + AUGITE PORPHYRY

1186-R-9 ROCK SAMPLE LOCATION

010+84 SE SHEAR ZONE SHOWING ATTITUDE

GEOLOGIC CONTACT

TWIN EAGLE RESOURCES INC.

GOLD MOUNT CLAIM GROUP
SIMILKAMEEN M.D., — NTS 92-H/10W

DETAIL B

To accompany a report by:
L. Christenson, M. Sc.

Drawn by: CN LC SW

Date: January 1987

STRATO GEOLOGICAL ENGINEERING LTD.

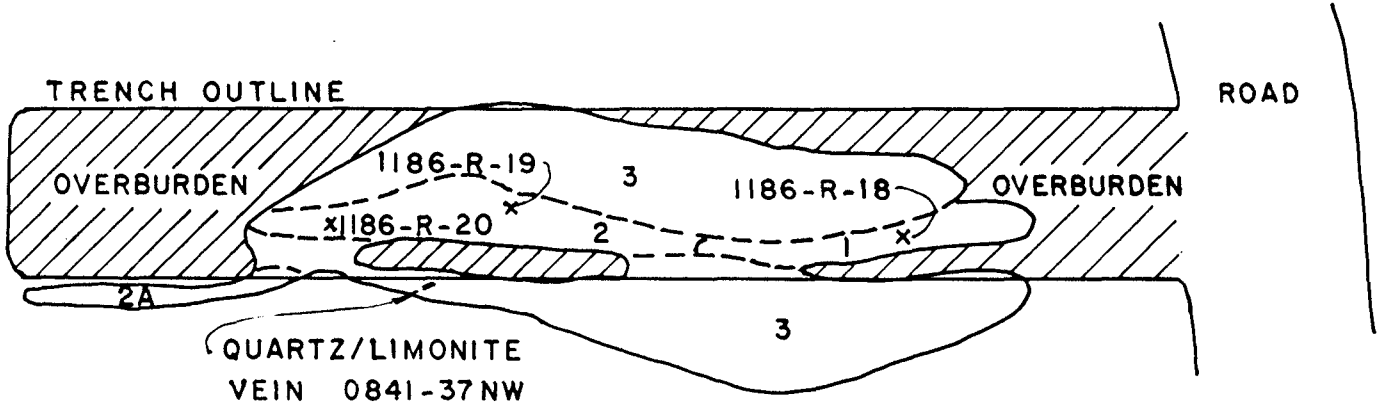

PLAN VIEW OF TRENCH FLOOR

LEGEND

1 SUBCROP - INTENSELY LIMONITIC SOIL WITH WHITE TO TRANSLUSCENT QUARTZ VEIN MATERIAL

2 BLEACHED VOLCANICS - SILICIFIED, CLAY ALTERED ≤5 % PYRITE

2A SAME AS 2 WITH ALTERATION VARYING FROM WEAK TO STRONG

3 ANDESITE - APHANITIC TO FELDSPAR PORPHYRY

x— 1186-R-18 - ROCK SAMPLE LOCALITY

- - - - - - - GEOLOGIC CONTACT

0 3 6 METRES

SCALE

FIGURE 9

TWIN EAGLE RESOURCES INC.

GOLD MOUNT CLAIM GROUP
SIMILKAMEEN M.D., — NTS 92-H/10W

DETAIL C

To accompany a report by L. Christenson, M.Sc

Drawn by: CN LC SW

Date January 1987

STRATO GEOLOGICAL ENGINEERING LTD.

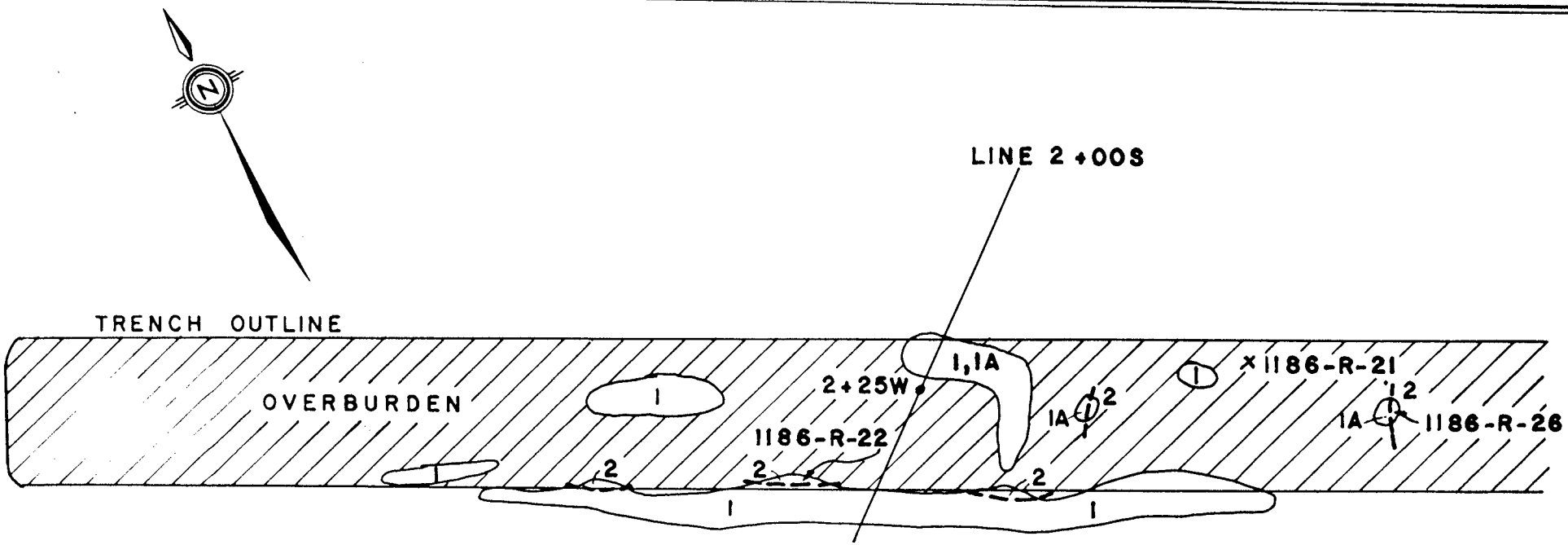

PLAN VIEW OF TRENCH FLOOR

0 3 6

SCALE- METRES

LEGEND

1 ANDESITE - APHANITIC TO PORPHYRITIC

1A ANDESITE - MODERATE TO STRONG CHLORITIZATION

2 BLEACHED VOLCANICS - SILICIFIED, CLAY ALTERED

GEOLOGIC CONTACT

1186-R-26 - ROCK SAMPLE LOCALITY

FIGURE 10

TWIN EAGLE RESOURCES INC.	
GOLD MOUNT CLAIM GROUP SIMILKAMEEN M.D., — NTS 92-H/10W	
DETAIL D	
To accompany a report by: L. Christenson, M. Sc.	
Drawn by: CN LC SW	Date: January 1987

STRATO GEOLOGICAL ENGINEERING LTD.

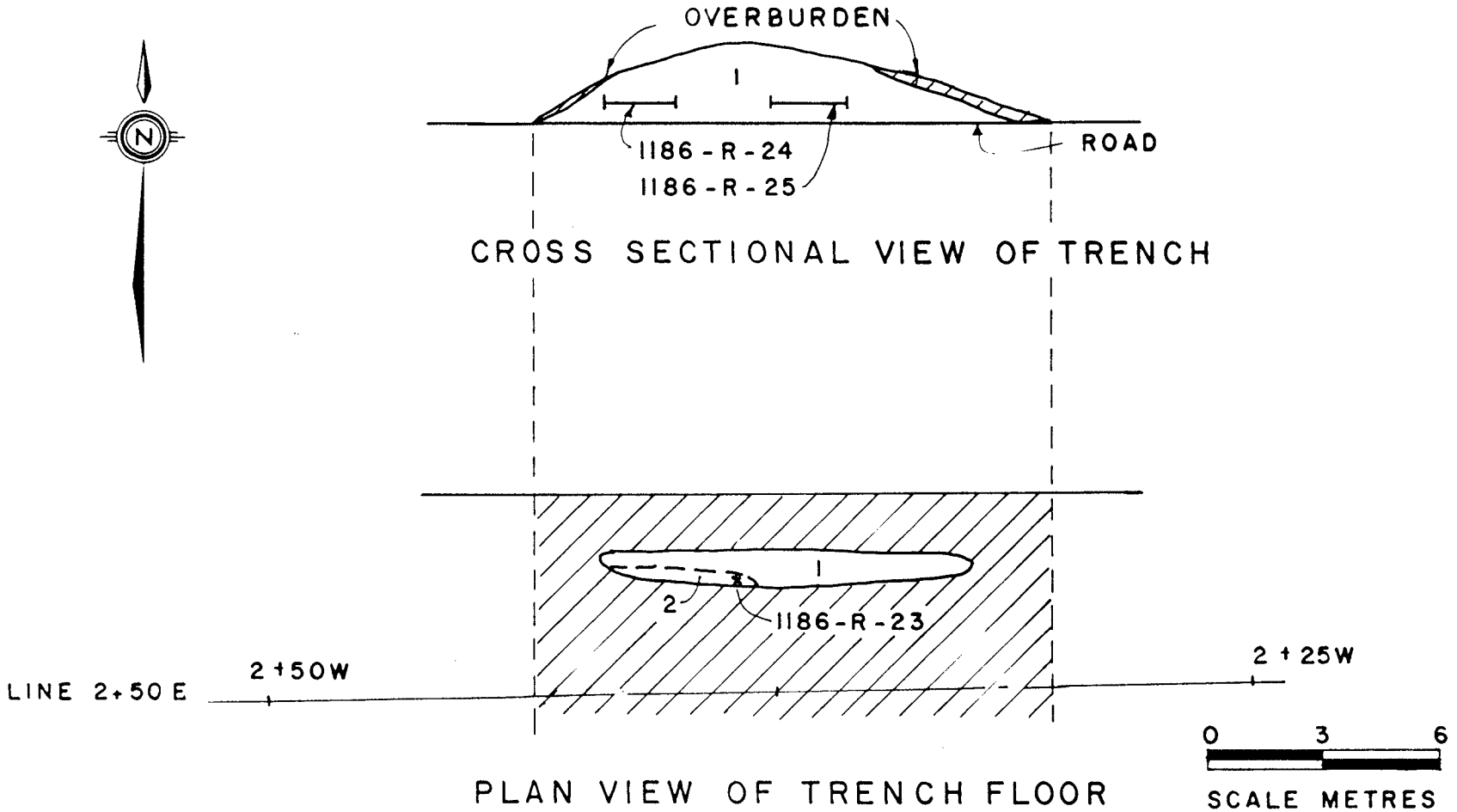

FIGURE 11

LEGEND

1186 - R - 24 — ROCK SAMPLE LOCALITY

GEOLOGIC CONTACT

1 — ANDESITE - RELATIVELY FRESH, SOME CALORITIZATION IN VICINITY OF 2 - Fe OXIDE STAIN ON FRACTURE SURFACES

2 — BLEACHED VOLCANICS - SILICIFIED, CLAY ALTERED - 3% PY

TWIN EAGLE RESOURCES INC.	
GOLD MOUNT CLAIM GROUP SIMILKAMEEN M.D., — NTS 92-H/10W	
DETAIL E	
To accompany a report by: L. Christenson, M.Sc	
Drawn by: CN LC SW	Date: January 1987

STRATO GEOLOGICAL ENGINEERING LTD.

GEOLOGICAL BRANCH
ASSESSMENT REPORT
15,850

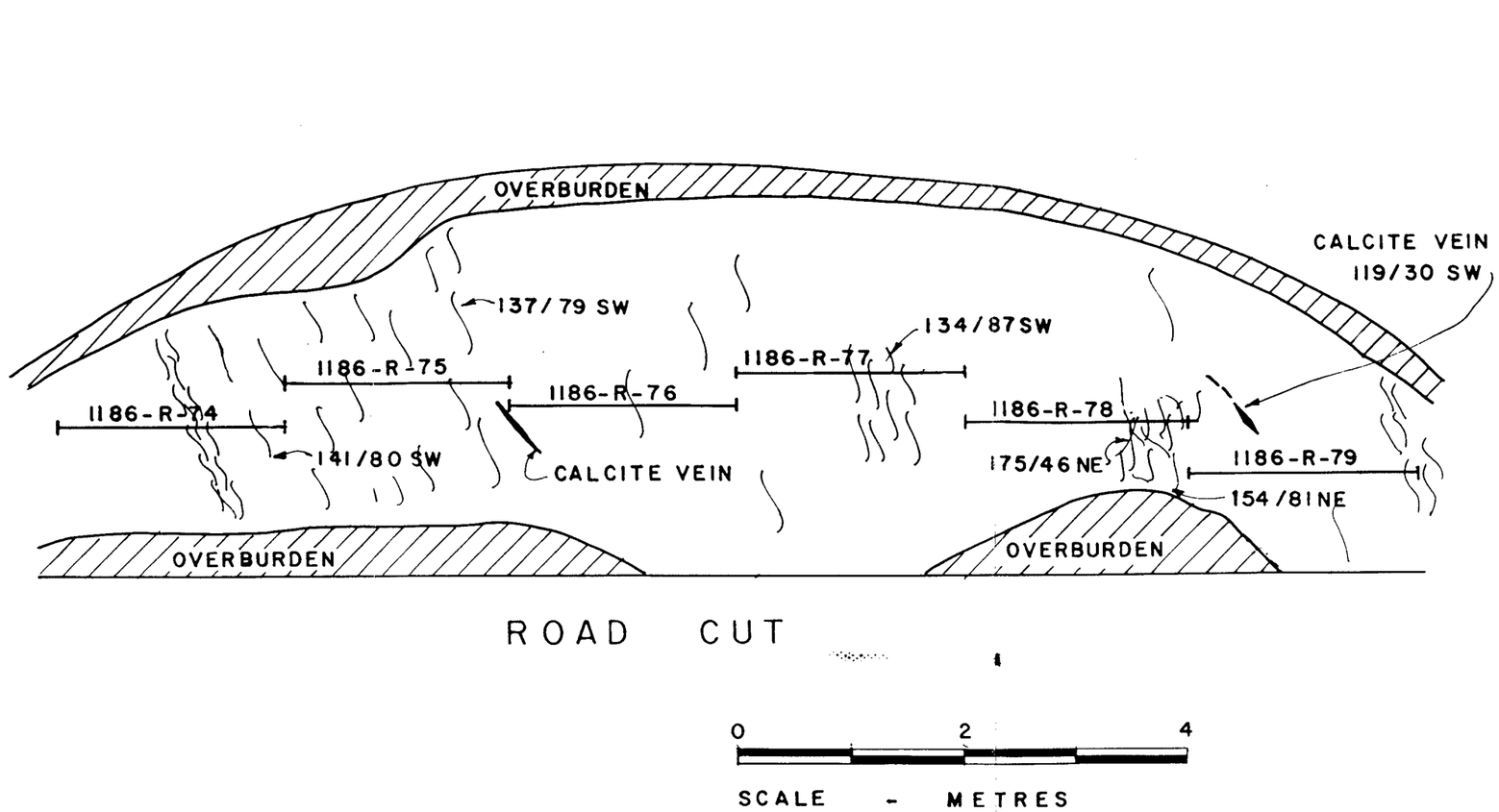

SAMPLES 1186-R-74 TO 1186-R-79:

GENERAL DESCRIPTION: Light green to dark green andesite weathered to a black-rust color. Medium to strongly altered with several heavily sheared zones. Pyrite is common as very fine grained disseminations and smeared along fractures.

VARIATION: R-79, 75 very heavily sheared with abundant limonite; shears are graphitic

R-75 coarse grained calcite vein with angular clasts of black siliceous volcanics up to 2m wide.

R-78 shearing along 2 distinct planes.

NOTE: ALL ROCK SAMPLES ARE 2M HORIZONTAL WIDTH

LEGEND

1186-R-74 — ROCK SAMPLE LOCALITY

175/46 NE — SHEARS SHOWING ATTITUDE

FIGURE 12

TWIN EAGLE RESOURCES INC.

GOLD MOUNT CLAIM GROUP
SIMILKAMEEN M.D. — NTS 92-H/10W

DETAIL F.

To accompany a report by: L. Christenson, M.Sc.

Drawn by: PB LC SW

Date January 1987

STRATO GEOLOGICAL ENGINEERING LTD.

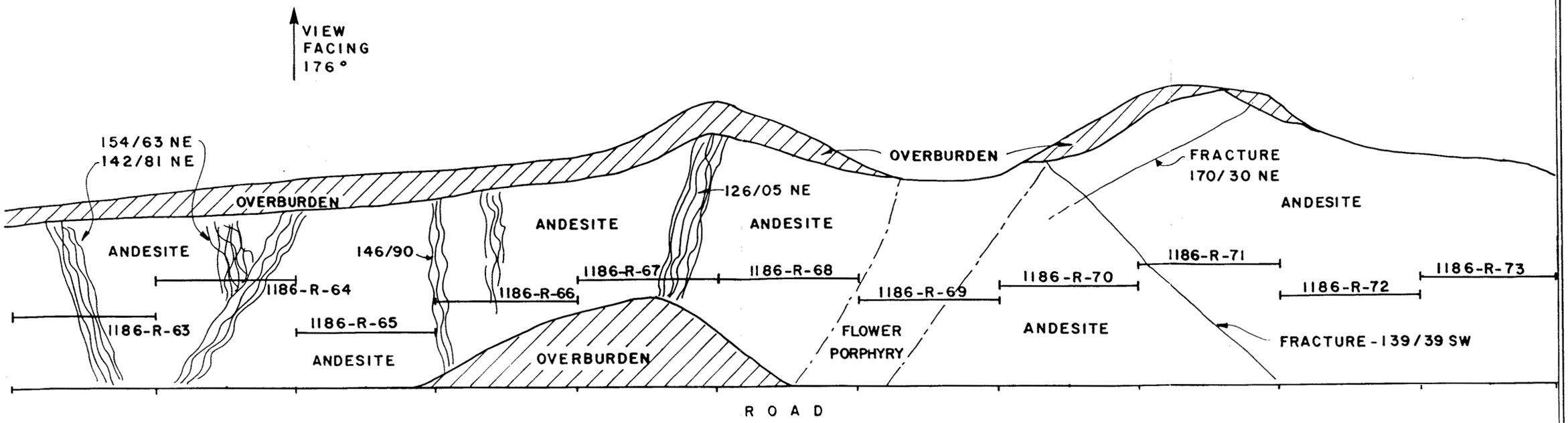

ROAD CUT SECTION

0 2 4 6

SCALE - METRES

GEOLOGICAL BRANCH
ASSESSMENT REPORT

15,850

FIGURE 13

SAMPLES 1186-R-63 TO 1186-R-73:

GENERAL DESCRIPTION: Grey to green hydrothermally altered andesite, very fine grained with visible feldspar and very little pyroxene, moderately to heavily fractured with multiple shear zones about 50cm wide. Minor fine grained pyrite and abundant limonite; trace magnetite

VARIATIONS: R-63 & 64 heavily sheared with minor graphite in shears

R-65 30cm band of highly silicified rock rich in disseminated pyrite - 2%

R-66 & 67 heavily sheared, minor very fine grained magnetite in andesite

R-68 Minor fracturing, minor alteration

R-69 Flower porphyry, very minor alteration

R-70, 71, 72 Moderately altered andesite

R-73 Grey cherty lenses 10 - 30 cm wide in andesite

NOTE: ALL ROCK SAMPLES ARE 2M HORIZONTAL WIDTH

LEGEND

1186-R-68	ROCK SAMPLE LOCALITY
154/63 NE	SHEAR SHOWING ATTITUDE
	GRADATIONAL CONTACT

TWIN EAGLE RESOURCES INC.

GOLD MOUNT CLAIM GROUP
SIMILKAMEEN M.D., — NTS 92-H/10W

DETAIL G

To accompany a report by: L. Christenson, M. Sc

Drawn by: PB LC SW

Date: January 1987

STRATO GEOLOGICAL ENGINEERING LTD.

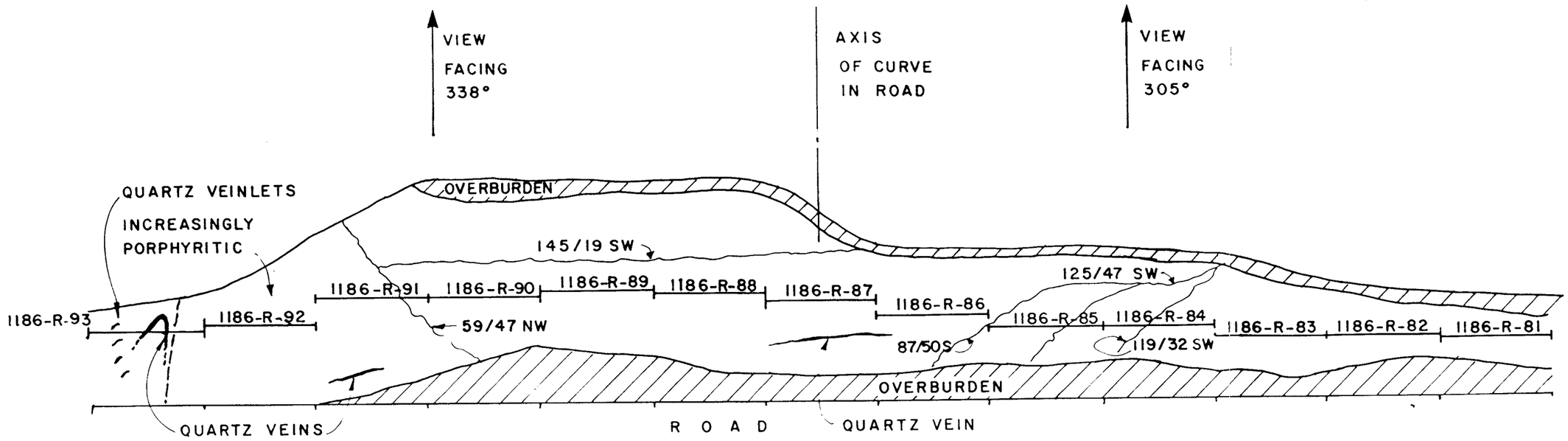

ROAD CUT SECTION

0 2 4 6 8

SCALE - METRES

GEOLOGICAL BRANCH
ASSESSMENT REPORT

15,850

SAMPLES 1186-R-81 TO 1186-R-93:

GENERAL DESCRIPTION: Green-grey andesite, weathers rusty brown. Rock is moderately to strongly altered. Foliation prominent throughout; minor shears roughly parallel the foliation; infrequent vesicles elongated in direction of foliation. Disseminated fine grained pyrite throughout the outcrop. Abundant iron staining found along fracture planes.

VARIATIONS:

R-84 & 85 - Moderately sheared.

R-87 & 88 - Abundant disseminated very fine grained pyrite, very fine grained pyroxene, and minor quartz.

R-89, 90 & 91 - Fine grained pyroxene, abundant very fine grained pyrite; samples are siliceous.

R-92 - Pyroxene porphyry, pyroxene fine to medium grained; sample is vesicular, contains abundant very fine grained pyrite; trace magnetite.

R-93 - From contact between pyroxene porphyry and dark green, non-porphyritic andesite.

NOTE: ALL ROCK SAMPLES ARE 2M HORIZONTAL WIDTH

LEGEND

1186-R-92	ROCK SAMPLE LOCALITY
119/32SW	SHEAR SHOWING ATTITUDE
	GEOLOGIC CONTACT

FIGURE 14

TWIN EAGLE RESOURCES INC.

GOLD MOUNT CLAIM GROUP
SIMILKAMEEN M.D., — NTS 92-H/10W

DETAIL H

To accompany a report by:
L. Christenson, M Sc

Drawn by PB LC SW

Date January 1987

5. GEOPHYSICS

Magnetometer total field and VLF-EM surveys were conducted over a concurrently established grid. The objective was to expand the area covered by previous geophysical work. It was found that the flagging from previous years had deteriorated to the point where the old grid lines were difficult to follow, which necessitated re-flagging the previous grid in order to expand it. The previous grid lines were followed as closely as possible.

5.1 Magnetometer Survey

A detailed total field survey was conducted over the entire grid using a Scintrex MP-2 proton precession magnetometer. During the survey the baseline was looped and the values at the E-W grid crosslines were corrected for drift and used as reference points. The E-W survey lines were then looped to permit correction for diurnal variation.

Readings were recorded at 25 meter intervals. A datum of 55,000 gammas and a contour interval of 100 gammas was used to plot and contour the results (Figure 15). The readings range from 60,830 to 55,049 gammas, with an approximate background value of 56,500 gammas.

From previous work in the Tulameen area, it is known that the Nicola Group presents a relatively flat magnetic signature. This characteristic magnetic response is noted in the eastern and northern grid areas, which coincides with mapped exposures of the Nicola Group.

The southwestern portion of the grid area contains several magnetic highs, which are thought to represent outcroppings of the Tulameen Ultramafic Complex. A gradient increase toward the southwest reflects the ultramafic contact in that area, mapped by Pawliuk (December 1985).

Several circular or ellipsoidal magnetic highs occur in the western grid area, and in the area centered on Lines 7+00S and 8+00S, around 3+00E. These are thought to represent tongues or satellite plugs of the main ultramafic unit. All of these magnetic highs reflect a dipolar response showing a weak magnetic low on the eastern side of the anomaly.

Extending between BL - 4+00W on L17+00S to BL - 2+00W on L11+00S, a lower magnetic response occurs. Several magnetic low anomalies are present within this area, particularly at L17+00S, 3+00W, and L11+00S, 0+50W. The magnetic low trend between these two zones is not clearly established, however the lows are

thought to reflect alteration and/or shearing within the Nicola Group. This alteration may be related to the intrusion of the Tulameen Complex.

Weaker, isolated magnetic highs in the northwestern grid area are thought to also reflect small outcroppings of the Tulameen Complex, east of the main contact.

The magnetic response over the remainder of the northern and eastern grid area is relatively flat. Trends reflect the north-northwesterly trending rock foliation and bedding seen in the area. Significant magnetic features do not reflect the large changes in conductivity seen by the electromagnetic survey in the eastern grid area. The magnetic response in the vicinity of the Rabbitt Mine does not clearly reflect the structure or mineralization in that area.

5.2 Very Low Frequency Electromagnetic Survey

In order to utilize bedrock conductivity as an aid to geological interpretation, VLF-EM surveys were conducted over the entire grid. The survey was conducted with a Sabre Electronics Model 27 receiver, using Cutler, Maine as a signal source. Readings were recorded at 12.5m intervals along the E-W grid crosslines. Both dip angle and field strength measurements were

recorded; dip angle measurements were filtered using the Fraser Filter method to permit presentation of data in contour map form. The method is well known and fully described in the literature. Figure 16 presents the VLF-EM profile plots and the Fraser Filter contour map is shown as Figure 17.

Previous electromagnetic work conducted over the Gold Mount claim group has been concentrated in the area of the Rabbitt Mine (Tully, 1983; Uher and Disirito, 1986) and in the area along the Tulameen River road (Pawliuk, 1985). It was decided to expand the VLF-EM survey to cover and connect these areas.

A number of strongly conductive zones with considerable strike lengths are present in the eastern grid area. This area of high conductivity was first noted by Tully (1983), and subsequent trenching uncovered a body of graphitic argillites which were deemed to be the source of the anomaly (Uher and DiSpirito, 1986). Work undertaken for this report has expanded the anomalous eastern conductive zone (see Figure 17, VLF-EM Fraser Filter Contour Map).

The conductor extending from L2+00S at 8+00E to L12+00S at 9+00E shows very high Fraser filter values (up to +72). This is inferred to be a major fault zone, which Rice (1960) has mapped in the area.

Only weak conductive zones exist to the west of 1+00E. These weak conductors do not clearly reflect the magnetic anomalies present in this area. Similarly, the mineralization at the Rabbitt Mine is not correlated with the VLF-EM results.

6. GEOCHEMISTRY

The geochemical program emphasized soil sampling, with limited additional rock sampling from areas of alteration and trenching. All of the samples were submitted to Acme Analytical Laboratories Ltd., in Vancouver, B. C. The elements Ag, Cu, Pb, Zn, As, and Ni were analyzed by the Induced Coupled Plasma (ICP) method. Gold was determined by the Atomic Absorption (AA) method.

Analytical Procedures are reported in Appendix II.

Assay results are listed in Appendix III.

Rock sample descriptions are listed in Apendix V.

6.1 Soil Sampling

A total of 595 soils were collected from the Gold Mount claim group during this study. Samples were collected at 25 meter intervals along the E-W grid crosslines. The soils were obtained from the "B" soil horizon, at a depth of 20-40 cm. A pit was dug at each location and approximately 500g of soil was placed in a standard Kraft envelope. Care was taken to avoid organic rich materials.

Three small scale grids were constructed to cover areas of anomalous soils delineated by previous work. The three grids were established between L0+75S and 2+50S, between stations 4+00W

geochemical trend, and it is believed that migration from the Rabbitt vein system is responsible for the scattered soils anomalies present in these areas.

Statistical treatment of the assay results was completed by the plotting of histograms and the derivation of the statistical mean and standard deviation. Anomalous values for Cu, Pb, Zn, and Ni were determined from the histogram plots (Appendix IV). Histograms for gold and silver were not constructed, as previous work on the Gold Mount claims and Tulameen area had established the background and threshold limits for these elements. Anomalous values for each element are plotted on Figure 18, the soils geochemistry anomaly map.

The results of the soil sampling are discussed below:

(a) Gold: Soils assaying between 25-95ppb gold were considered weakly anomalous; those above 95ppb gold were considered highly anomalous. Twenty-nine soils were considered weakly anomalous; 14 soils were judged highly anomalous. These values plot in a scattered pattern on the soils geochemistry anomaly map (Figure 18). A discernable concentration of anomalous values occurs in the area of the Rabbitt vein system and extends southerly to line 5+50S, the area drilled by DDH-R-1 and 2. This concentration of values may be due to migration of

gold from the Rabbitt vein system, and from the quartz veining seen in the area of L5+50S. Another scattered concentration of anomalous values occurs between Line 10+00S, 4+50W, to Line 17+00S, 4+00W, extending easterly to the baseline. Quartz veining, partially exposed by previous trenching in this area, is believed to be responsible for these anomalies. The remainder of the grid area does not present any discernable gold trends.

(b) Silver: Soils assaying between .5 - .9ppm silver were considered weakly anomalous; of which there are 23; only one soil sample assayed above .9ppm and was considered highly anomalous. Silver anomalies plot in a pattern similar to the gold anomalies, but are slightly more scattered. Other than a marginal concentration in the area of the Rabbitt vein system, no discernable silver anomaly trends exist.

(c) Copper: Soils assaying between 250-350ppm copper were considered weakly anomalous, of which there are 11. Five soils assayed above 350ppm copper and were considered highly anomalous. Copper anomalies are concentrated in the southwestern grid area, between Line 9+00S and Line 16+00S. This may reflect either the ultramafic unit mapped by Pawliuk (1985) or the scattered, previously trenched quartz veining in this area.

(d) Lead: Only one soil sample analysis was considered anomalous in lead: L0+50N, 0+00 (80ppm). This is thought to be caused by the Rabbitt vein system in this area.

(e) Zinc: Soils assaying between 400 and 600ppm zinc were considered weakly anomalous, of which there are three. Only one soil sample assayed above 600ppm zinc, and is considered highly anomalous (L5+00S, L5+50W). These few anomalies cannot be considered a significant trend.

(f) Nickel: The eastern and western nickel soil assays were compiled into separate histograms. It was felt that the ultramafic mapped in the western grid area would cause a population higher in nickel values in that area. Enigmatically, the eastern grid area returned higher nickel background values. However, anomalous values are concentrated west of the baseline.

East of the baseline, values between 80-300ppm were considered weakly anomalous, of which there are two. West of the baseline, values between 90-100ppm were considered weakly anomalous (total of 3 samples) and values above 100 ppm were considered strongly anomalous (total of 4 samples). None of the soils assays from the eastern grid area were considered strongly anomalous in nickel.

6.2 Rock Sampling

The rock samples collected from the road cuts and trenches were previously discussed under Section 4. Additional rock samples were collected from the southwestern grid area over areas previously trenched by unknown persons; from the old Rambler workings; along the newly constructed drill roads; and from quartz veining in the area of DDH-R-1 and 2. These 39 samples are not enough for statistical comparison, and are only described here in qualitative terms.

Three samples, RA-1, 2, and 3 were collected from massive, barren, milky-white quartz outcropping near drill holes R-1 and 2 (location shown on Figure 6). These samples assayed uniformally low in silver and gold; however, RA-3 ran 414ppm copper.

The surface expression of the Rambler quartz vein was sampled for comparison with the Rabbitt vein system (samples 1186-R-44 through 48, location shown on Figure 18). The assay results for these samples range from 7-122ppb gold and from .1 - .5ppm silver. No other significant metal enrichment was noted.

Areas of previously trenched quartz veining and alteration in the southwestern grid area were sampled (1186-R-27 through 43, location shown on Figure 18). Some significant values were returned, particularly in the old trenches located along L17+00S at approximately 1+50W. Sample 1186-R-35, from this area, assayed 2390ppb gold and 2.6ppm silver; sample 1186-R-33 assayed 170ppb gold and 1.8ppm silver.

Samples 1186-R-49 through 61 were collected along the newly constructed drill roads, from areas of alteration uncovered during the road building. Assays from these 13 samples are generally low in silver and gold. Three of these samples assayed 21-62ppb gold, indicating minor enrichment in those areas.

Sample 1186-R-80 was collected along the Grasshopper Creek Road, north of DDH-R-12 and 13 (Figure 6). This sample tested an outcrop of iron-stained volcanics. No significant results were obtained.

7. UNDERGROUND WORK

Underground work during this program consisted of opening up of old workings, mapping and sampling, and the collecting and assaying of 6,640lbs of vein material for bulk sample analysis.

Between 1938-1940, approximately 170m (560ft) of underground workings were constructed in the Rabbitt Mine (Figure 19). Two levels with portals were constructed, connected by a raise. Stopes were mined from Level 1, the upper level, along a steeply-dipping quartz vein. Since the time that work ceased in 1940, both portals collapsed or were purposely caved.

An effort was made during the Winter, 1986 program to clear the portal to Number 1 Level, using a Bobcat loader and blasting. This was unsuccessful due to continued caving of the adit roof (Uher and Dispirito, 1986).

During the present program, an effort was made to reach the Number 1 Level from Number 2 Level. The lower portal was cleared by a backhoe owned and operated by W. A. (Bud) Blows of Princeton, B. C. G. Cote (miner) and B. Matheson (miner) rehabilitated the portal and tunnel lagging, and attempted to reach the Number 1 Level by blasting out the top of the raise. This proved unsuccessful, and the effort to enter the Number 1 Level

was continued by means of the stope to surface above the raise. Extensive hand mucking and blasting within the stope could not break through to the Number 1 Level and the effort was abandoned.

It was decided to collect a large bulk sample of vein material for assay, as previous work had shown gold values to be spotty and extremely variable. A total of 6,640lbs (298.8kg) of picked vein material was collected from the SW vein zone in the large open stope (Figure 19, this report, and Figure 6 from Wares, May, 1984). The quartz vein in this area is 1 meter wide and contains chalcopyrite, pyrite, and traces of galena and sphalerite. The sample was shipped to Sando Industries of Ladner, B. C., crushed and ball milled to approximately 100 mesh, table concentrated and assayed. The sample assayed 0.085 Troy ounces gold per ton (assay procedures and results given in Appendix III B).

The number 2 level was mapped and sampled in detail (Figure 20). Several prominent veins exist in the drift, but assay results were poor, indicating only minor enrichment in gold.

8. DIAMOND DRILLING

8.1 Overview

Previous diamond drilling on the Gail Gold claim has been described by Tully (1983), Wares (May, 1984), and Uher and Dispirito (1986). The objective has been to define the extent and grade of the Rabbitt vein system.

The program completed in March, 1986, totalled 1522 meters of diamond drilling, and was the most aggressive prior to this study. The results of the March, 1986 program have been summarized by Dispirito (September, 1986, pp. 10-12), and are excerpted here:

> "Holes DDH-86-1 - 5, 10 - 12, 16, 28, 29 tested the vein for lateral as well as down dip extensions, from the south end of the open stope to 42m southwest of the open stope.
>
> Results of these holes indicate that the vein structure persists to at least 35 metres depth.
>
> Holes DDH-86-16, 29 tested the structure at 83 and 53 metres respectively. Both holes failed to intercept the structure at these depths.
>
> The quartz vein within this section is vertical and is between one and three metres wide.
>
> Holes DDH-86-6 - 9, 13 - 15, 20 - 27 tested projected extensions of what was previously interpreted as multiple veins. Results of these holes have shown that only one vein is present. The structure here continues to exhibit good alteration, but the amount of quartz is very poddy and discontinuous. Down dip continuity in this area was not tested with deep drill holes.

Holes DDH-86-17 - 19 tested for the possibility of a quartz vein near the portal to the Rabbitt adit, implied on 1940 underground workings map. The holes failed to intercept any structures downstrike of the portal vein. However a weak structure was intercepted at a greater depth and therefore further south of the portal.

The vein, defined to a certain extent by drilling under the Gail Gold claim, appears to be composed of vertically stacked lenses of mineralized quartz. The vein has been defined over a strike length of 100 metres and a dip length of 35 metres. Systematic exploration by diamond drilling should continue in order to delineate the southerly strike and dip extension of the vein."

The 1986 drilling program detailed in this report totalled 957.7 meters (3,142 ft). One drill was used, a JKS-300 using a BDBGN string (0.625 inch core size). Water was pumped from a small creek on the western claim margin, at the edge of a logging clearcut. The drilling contracter was Four Star Drilling of Abbotsford, B. C.

Drilling objectives were:

(1) to extend the strike length and down dip extensions of the southwest-trending vein system;

(2) to test the north-trending vein system for a northerly extension;

(3) to test a possible southeast-trending vein system, implied on the 1946 map of the Rabbitt workings (Figure 19).

(4) to test a prominent quartz vein located at Line 5+50S.

It was felt that this approach would test all possible extensions of the previously delineated vein system.

The location and elevation of each diamond drill hole is given in Figure 6. Elevations and positions were determined by means of a transit survey.

3.2 Drilling Results

Seventeen diamond drill holes, totaling 957.7m, were drilled. Two holes tested a prominent quartz vein at Line 5+50S, two holes tested the possibility of vein extension trending northerly from the Rabbitt Mine portals, four holes tested the southeast vein extension, and nine holes tested the southwest vein system for lateral extent. These four areas will be discussed separately.

Drill hole logs are presented in Appendix IA, and cross sections of each hole are included as Appendix IB. The drill hole plan map is presented as Figure 6.

DDH-R-1 and 2 tested a quartz vein which had been previously exposed by trenching. It can be traced for at least 68m in a generally north-south direction, and is up to 1m wide. The vein appears to be nearly vertical, and is composed of milky-white, mostly barren, massive quartz. DDH-R-1 was sited 21m east of the vein and drilled westerly at -45 degrees. DDH-R-2 was sited 23m west of the vein and drilled easterly at -45 degrees. Neither hole intersected significant quartz veining at depth, and it was decided not to persue the structure further.

DDH-R-3 through 11 tested the southwest-trending vein

system. This was an extension of the Winter 1986 drill program which had tested this structure and found it to be poddy and discontinous. The trenching described in Section 4 traced a surface alteration envelope for over 200m, and it was decided to site the majority of the drilling program over this area. The 417m of drilling over this target failed to hit a significant structure at depth. Small quartz stringers and alterations encountered at depth indicate the feeder zone for the surface alteration was intersected, but assay results indicate low gold values for these narrow intersections. It is felt that the zone is now adequately tested.

The north-south trending adit vein was tested for a northerly extension by DDH-R-12 and 13. The location of these holes are also shown on Figure 19, the Rabbitt Mine map. The results from these two holes are similar to the results of testing done on the southwest vein system - alteration zones encountered at depth indicate the structure was intersected but assays poorly in gold.

The last 4 drill holes, DDH-R-14 through 17, tested the possibility of a southeast-trending vein system, as indicated on the 1946 Rabbitt Mine map (Figure 19). DDH-R-14 intersected several zones of thin quartz veinlets and limonitic alteration,

but assay results from these narrow intercepts do not reveal significant gold enrichment. DDH-R-15 was drilled with similar results. DDH-R-16 and 17 were drilled at the projected intersection of the southwest trending vein and the graphitic zone delineated by the VLF-EM anomaly. Narrow zones of quartz and/or calcite veinlets, in interbedded graphitic argillites and volcanics, showed very low values in gold. It is felt the possibility of a prominent southwesterly vein system has been disproven.

9. CONCLUSIONS AND RECOMMENDATIONS

9.1 Review

The program described in this report was undertaken with two broad objectives: to test the economic potential of the Rabbitt vein system, and to extend grid surveying to locate other possible gold mineralized structures. An outline of the work performed is as follows:

(1) A survey grid totalling 27.3km was constructed. Over this grid 595 soil samples were collected and 25.9km of VLF-EM and 25.5km of magnetometer surveys were performed.

(2) The southwesterly-trending Rabbitt vein system was trenched by bulldozer and mapped in detail. Additional road cuts along the Rabbitt Mine-Grasshoper Creek Road were similarily mapped and sampled. Significant gold mineralization was not encountered.

(3) The Rabbitt vein system was tested for lateral extension by 957.7m of diamond drilling. No significant gold mineralization structures were encountered.

(4) The Number 2 Level of the Rabbitt Mine was opened and sampled. An effort to enter the Number 1 Level was unsuccessful.

(5) A 6,640lb (298.8kg) bulk sample of picked vein material was collected from the open stope, from the intersection of the southwest-trending vein and the north-trending adit vein. The sample assayed 0.085 troy ounces per ton.

9.2 Conclusions

(1) Furthur efforts to directly trace the Rabbitt vein systems are not justified. The bulk sample of picked vein material assayed sub-economic (0.085 oz/ton). The Winter 1986 drill program failed to locate quartz veining at depth (Uher and Dispirito, 1986) and this program has failed to prove any lateral extent to the vein system. It appears that the Rabbitt quartz veins were emplaced along a system of listric faults - ie. along fault planes that flatten with depth. In such a model, only the upper parts of the system remain open and permit fracture-filling quartz veining; the lower parts are too tight to permit significant quartz precipitation. The flat-lying fractures seen in the Number 2 Level, and the shear zones encountered at depth by drilling, may represent the lower parts of a listric fault system.

(2) The grid survey has delineated a number of geohysical anomalies. VLF-EM anomalies have been shown to be caused by graphitic zones and faults; magnetic anomalies have been related to the ultramafic intrusions. Neither survey has been useful in extending the Rabbitt vein structure. The 595 soil samples collected over the grid have not, by themselves, proved useful in defining new exploration targets.

(3) An area in the southwest grid which had been previously trenched contains quartz veining with encouraging gold and silver values. The snow cover present at the time of this report prevented a detailed examination of this area.

9.3 Recommendations

The focus of continued explorations over the Gold Mount property should concentrate on tracing the quartz veining in the southwest grid area. The area west of the baseline, between Lines 10S and 17S, should be mapped and sampled in detail. The old trenches in this area should be cleared for sampling and exposed veins should be blasted open for examination. Detailed soils grids in this area may prove useful for tracing mineralized structures.

The eastern Gold Mount claims area has not been prospected. Geological mapping and sampling should be extended across and east of Lawless Creek. The best access to this area is from the east, down an old cat road leading to old placer workings in Lawless Creek.

Respectfully Submitted,
Strato Geological Engineering Ltd.

Lief Christenson

Lief Christenson, M. Sc.
Geologist

February 25, 1987.

STRATO GEOLOGICAL ENGINEERING LTD.

CERTIFICATE

I, LIEF CHRISTENSON, hereby certify as follows:

1. I am a consulting geologist working for Strato Geological Engineering Ltd. with offices at 3566 King George Highway, Surrey, British Columbia, V4A 5B6.

2. I received the degree of Bachelor of Science in Geology in 1982 from Western Washington University.

3. Since graduation I have been involved in mineral exploration programs in Alaska, British Columbia, Nevada and Washington State.

4. I received the degree of Master of Science in Geology in 1986 from Western Washington University.

5. This report is based on field examinations made by myself and others under my direct supervision during the months of October through December, 1986.

6. I have not received, nor do I expect to receive, any interest, direct, indirect, or contingent, in the securities or properties of Twin Eagle Resources Inc.

Dated at Surrey, Province of British Columbia, this 25th day of February, 1987.

L Christenson

L. Christenson, M.Sc.

STRATO GEOLOGICAL ENGINEERING LTD.

REFERENCES

Dispirito, F. (September 10, 1986)
Report on the Gold Mount Claim Group, Similkameen Mining Division, Tulameen, British Columbia, unpublished report prepared for Twin Eagle Resources Inc.

Findlay, D. C. (1969)
Orgin of the Tulameen Ultramafic-Gabbro Complex, Southern British Columbia, Cdn. Jour. Earth Sci., Vol. 6, pp. 399-425.

Monger, J. W. H. (1985)
Structural Evolution of the Southwestern Intermontane Belt, Ashcroft and Hope Map Areas, British Columbia; in Current Research, Part A, Geological Survey of Canada, Paper 85-1A, pp. 349-358.

Pawliuk, D. J. (December, 1985)
Geochemical, Geophysical and Geological Report on the grasshopper 1 and 2 Mineral Claims, Grasshopper Mountain, Tulameen River Area, Similkameen Mining Division, B. C. unpublished report prepared for Monica Resources Ltd.

Pond, M. A. (1983)
Geological Summary on the Gail Gold Mineral Claim, Lawless Creek Area, Similkameen Mining Division, BC; unpublished report prepared for Monica Resources Ltd.

Rice, R. M. A. (1960)
Geology and Mineral Deposits of the Princeton Map - area, British Columbia, Geological Survey of Canada Memoir 243.

Steiner, R. R. (1979)
Report on the Rabbitt Mine, Lawless Creek - Tulameen River Area, Similkameen Mining Division, B. C.; unpublished report prepared for Mr. Ron Brown.

Tully, (1983)
Report on the Gold Mount, Gail Gold, Weldonna, Bonanza Gold, Ace, Gold Creek and former Bonanza Queen - Nevada Mineral Claim Group, Record Nos. 511(2), 1381, 1382(3), 340, 341, 344, 573(5), Grasshopper Mountain - Tulameen River Area, Similkameen Mining Division, British Columbia; unpublished report prepared for Monica Resources Ltd.

Wares, R. (May 17, 1984)
Report on the Rabbitt Mine - Gold Mount Claim Group, Grasshopper Mountain - Tulameen River Area, Similkameen Mining Division, Tulameen, British Columbia; unpublished report prepared for Monica Resources Ltd.

Wares, R. (August 9, 1984)
Report on the Rabbitt Mine - Gold Mount Claim Group, Grasshopper Mountain - Tulameen River Area, Similkameen Mining Division, Tulameen, British Columbia; unpublished report prepared for Monica Resources Ltd.

Uher, L. and DiSpirito, F. (March 20, 1986)
Report on the Rabbitt Mine Drill Program, Grasshopper Mountain, Tulameen River Area, Similkameen Mining Division, B. C.; unpublished report for Monica Resources Ltd.

APPENDIX I A

Diamond Drill Core Logs

DIAMOND DRILL RECORD

PROPERTY RABBITT

HOLE No. DDH R-1

DIP TEST		
	Angle	
Footage	Reading	Corrected

Hole No. DDH-R-1 Sheet No. 1 Lat.

Section Dep.

Date Begun OCT 25, '86 Bearing 270°, -45°

Date Finished OCT 26, 86 Elev Collar 1467 m

Date Logged Dec 9, 86

Total Depth 124' (37.8m)

Logged By C.N.

Claim GAIL GROUP

Core Size BDGM

DEPTH FROM	DEPTH TO	RECOVERY	DESCRIPTION 1' = 30.5 cm	SAMPLE No.	FROM	TO	WIDTH OF SAMPLE	Au ppb	Ag ppm	Cu ppm
0	13'	0%	OVERBURDEN							
13	22.5'	60%	UNCONSOLIDATED, BLOCKY, PEBBLY ANDESITE							
22.5	28'	60%	STRONGLY ALTERED VOLCANIC - ABUNDANT	DDH R1-1	23	25.5	2.5'	210	.1	63
			FeOx + SMALL QUARTZ STRINGERS; DISSEM-	DDH R1-2	26	28	2.0'	375	.3	74
			INATED PY <1%; FOLIATION @ 80° TO C/A.							
28	32.5'	90%	VOLCANIC BRECCIA - FINE GRAINED; CLASTS							
			SMALL AND FREQUENTLY NOT VISIBLE; FAINTLY							
			PORPHYRITIC (FELDSPAR), << 1% PY, DISSEMINATED							
			MINOR AMOUNT OF QUARTZ STRINGERS, CALCITE							
			ON FRACTURES.							
32.5'	34.8'	95%	HIGHLY ALTERED VOLCANIC - ABUNDANT FeOx, MINOR	DDH R1-3	32.5	34.8	2.3'	15	.1	50
			QUARTZ STRINGERS + VEINS TO .2 INCHES, <1%							
			PY, DISSEMINATED, FOLIATION @ 32° TO C/A							
34.8	74.5'	90%	VOLCANIC BRECCIA - COARSE GRAINED							
			ABUNDANT FELDSPAR PHENOCRYSTS (≤ 40%)							
			TRACE QTZ STRINGERS, A FEW CALCITE VEINS							
			+ STRINGERS + COATINGS ON FRACTURE SURFACES;							
			CORE IS CARBONATE FLOODED TO 52'; SOME							
			FeOx ON FRACTURE SURFACES; DISSEMINATED PY << 1%							
			61.3' - 1.5" VEIN OF QUARTZ WITH MINOR CALCITE							
			LOCALLY CONTAINS ≤ 10% AUGITE PHENOCRYSTS							

NEVILLE CROSBY INC.
TELEPHONE USE-4343

DIAMOND DRILL RECORD

PROPERTY RABBITT

HOLE No. DDH R-1

DIP TEST		
	Angle	
Footage	Reading	Corrected

Hole No. DDH R-1 Sheet No 2

Section

Date Begun

Date Finished

Date Logged

Lat.

Dep.

Bearing

Elev Collar.

Total Depth

Logged By G.N.

Claim

Core Size

DEPTH FROM	DEPTH TO	RECOVERY	DESCRIPTION 1' = 30.5 cm	SAMPLE No	FROM	TO	WIDTH OF SAMPLE	Au ppb	Ag ppm	Cu ppm
			71.5' - CORE VERY BLOCKY, CHLORITIC.							
74.3	88.5'	95%	ANDESITE - FINE GRAINED, <1% Py, DISSEMINATED;							
			TRACE CALCITE ON FRACTURES, MINOR QUARTZ							
			VEINING							
			74.3' - 5" WIDE QUARTZ - CARBONATE - CHLORITE							
			VEIN - QUARTZ IS OPAQUE WHITE							
			74.9 - 75.3' - BLOCKY, GROUND CORE, MINOR PIECES							
			OF WHITE QUARTZ							
			76.2' - 2½" WIDE QUARTZ - CARBONATE - CHLORITE	DDH R1-4	74.3	76.4	2.1'	42	.2	36
			VEIN.							
88.5	100.5'	100%	VOLCANIC BRECCIA - CONTAINS CLASTS OF PORPHYRITIC							
			ANDESITE. PHENOCRYSTS ARE EITHER PLAGIOCLASE							
			OR AUGITE MATRIX IS ALSO PORPHYRITIC - WITH							
			PHENOCRYSTS OF AUGITE + PLAG. IN A FINE							
			GRAINED GROUNDMASS; MINOR QUARTZ VEINLETS.							
100.5	109.9'	100%	ANDESITE - MEDIUM TO COARSE GRAINED - LOCALLY							
			WEAKLY DIORITIC; <1% Py, DISSEMINATED, MINOR							
			QUARTZ VEINLETS;							
			100.8 - 101.8' - FINE GRAINED, SILICEOUS, VOLCANIC							
			BAND, ~10° TO C/A, ≈4% Py, DISSEMIN-	DDH R1-5	100.8	102.1	1.3'	240	.1	102
			ATED.							

NEVILLE CROSBY INC.
TELEPHONE USE-4343

DIAMOND DRILL RECORD

PROPERTY RABBITT

HOLE No. DDH R-1

DIP TEST		
	Angle	
Footage	Reading	Corrected

Hole No. DDH R-1 Sheet No. 3

Section

Date Begun

Date Finished

Date Logged

Lat.

Dep.

Bearing

Elev Collar.

Total Depth

Logged By C.N.

Claim

Core Size.

DEPTH FROM	DEPTH TO	RECOVERY	DESCRIPTION 1'=30.5 cm	SAMPLE No.	FROM	TO	WIDTH OF SAMPLE				
109.9	110.6'	100%	CHILL ZONE - APHANITIC, TRACE WHITE QUARTZ								
			VEINING, ≤3% Py, DISSEMINATED, GRADES INTO:								
110.6	113.2'	100%	VOLCANIC BRECCIA - AS ABOVE.								
113.2	124'	98%	ANDESITE + AUGITE PORPHYRY - GRADATIONAL								
			CONTACTS; MINOR QUARTZ VEINLETS; ≤1% Py,								
			DISSEMINATED, MINOR CALCITE ON FRACTURES +								
			IN QUARTZ VEINLETS; OCHRE STAIN ON SOME								
			FRACTURES; QUARTZ CONTAINS TRACE Py.								
124'	—	—	END OF HOLE								

NEVILLE CROSBY INC.
TELEPHONE USE-4343

DIAMOND DRILL RECORD

PROPERTY RABBITT

HOLE No. DDH - R - 2

DIP TEST		
	Angle	
Footage	Reading	Corrected

Hole No. R-2 Sheet No. 1/3 Lot.

Section Dep.

Date Begun 10/27/86 Bearing 90°, -45°

Date Finished 10/28/86 Elev. Collar 1466.9 m

Date Logged Dec 4/86

Total Depth 131 (39.9 m)

Logged By B.A

Claim GAIL GRID

Core Size BDGM

DEPTH FROM	DEPTH TO	RECOVERY	DESCRIPTION 1' = 30.5 cm	SAMPLE No.	FROM	TO	WIDTH OF SAMPLE	Au ppb	Ag ppm	Cu ppm
0	5		OVERBURDEN							
5	59		ANDESITIC TUFF - APHANITIC TO FINE GRAINED							
			(W/ SMALL ZONE OF MEDIUM GRAINED) MATRIX							
			W/ SUBROUNDED CLASTS UP TO 6 MM IN							
			DIAMETER. FRACTURES AT 60°-30° TO CA. W/							
			HEMATITE - LIMONITE - MANGANESE STAININGS.							
			MINOR QUARTZ AND QUARTZ-CARBONATE STRINGERS							
			USUALLY PRESENT AS FRACTURE FILLING.							
			5-12 HIGHLY FRACTURED AND SHATTERED ZONE							
			W/HEAVY HEMATITE-LIMONITE-MANGANESE STAININGS							
			ALONG FRACTURE PLANS.							
			18 SMALL 5 CM QUARTZ VEIN - NO VISIBLE							
			MINERALIZATION							
			19-21 INCREASE IN QUARTZ STRINGERS CONTENT	R-2-1	19	21	2'	3	.1	85
			24-25.5 HIGHLY FRACTURED ZONE W/ LOTS OF							
			HEMATITE-LIMONITE AND MANGANESE STAININGS AS							
			FRACTURE COATING. FRACTURES AT 70° TO C.A.							
			SLIGHT CLAY ALTERATION ALONG FRACTURE PLANS							
			30-32 SHATTERED ZONE W/ CLAY ALTERATION AND							
			HEAVY HEMATITE-LIMONITE-MANGANESE STAININGS.							

DIAMOND DRILL RECORD

PROPERTY RABBITT

HOLE No. DDH - R - 2

DIP TEST		
	Angle	
Footage	Reading	Corrected

Hole No. R-2 Sheet No. 2/3 Lat.

Section Dep.

Date Begun Bearing

Date Finished Elev. Collar

Date Logged Dec 4/86

Total Depth 131 (39.9 m)

Logged By B. A.

Claim

Core Size

DEPTH FROM	DEPTH TO	RECOVERY	DESCRIPTION 1' = 30.5 cm	SAMPLE No.	FROM	TO	WIDTH OF SAMPLE	Au ppb	Ag ppm	Cu ppm
			35-37 FRACTURES AT 30°-45° TO CA. HEAVY							
			HEMATITE STAINING. MINOR LIMONITE AND MANGANESE							
			FROM 37' PERVASIVE EPIDOTE ALTERATION TOWARDS							
			BOTTOM OF UNIT.							
			41.5-50 RELATIVELY FRACTURED WITH MAINLY							
			HEMATITE STAINING. FRACTURES AT 75° AND							
			SUBPARALLEL TO C.A. MINOR QUARTZ STRINGERS							
			ALONG FRACTURE PLANS.							
59	69		'SLIGHTLY BLEACHED VOLCANICS'. OF PROBABLE							
			ANDESITE ORIGIN. WHITISH AND RELATIVELY							
			SILICIFIED FINE TO MEDIUM GRAINED.							
			63-65 INCREASE IN SILICA CONTENT AND IN	R-2-2	63	65	2'	1	.1	26
			QUARTZ STRINGERS CONTENT - MINOR EPIDOTE							
69	77		ANDESITIC TUFF. SAME AS ABOVE (5-59)							
			71-72 AND 76-77 SHATTERED ZONES W/ HEAVY							
			HEMATITE-LIMONITE ALTERATION MAINLY ALONG							
			FRACTURE PLANS.							

DIAMOND DRILL RECORD

PROPERTY RABBITT

HOLE No. DDH - R - 2

DIP TEST		
	Angle	
Footage	Reading	Corrected

Hole No. R-2 Sheet No. 3/3
Section
Date Begun
Date Finished
Date Logged

Lat.
Dep.
Bearing
Elev. Collar.

Total Depth 131' (39.9 m)
Logged By B.A.
Claim
Core Size

DEPTH FROM	DEPTH TO	RECOVERY	DESCRIPTION 1' = 30.5 cm	SAMPLE No.	FROM	TO	WIDTH OF SAMPLE	Au ppb	Ag ppm	Cu ppm
77	81		'BLEACHED VOLCANICS' SAME AS ABOVE (59-69)							
			MORE SILICEOUS W/ EPIDOTE PERVASIVE							
			80-81 SHATTERED ZONE W/ MINOR HEMATITE							
			ALTERATION ALONG FRACTURE PLANS.							
81	91		ANDESITIC TUFF SAME AS ABOVE (5-59)							
			DARKER GREEN W/ FRACTURES AT 45° TO CA.							
91	95		'BLEACHED VOLCANICS' SAME AS ABOVE (59-69)	R-2-3	91	95	4'	11	.1	69
			MOSTLY SHATTERED W/ INCREASE OF QUARTZ							
			STRINGERS AND EPIDOTE CONTENT							
95	104		ANDESITIC TUFF SAME AS ABOVE (5-59)							
104	125		'SLIGHTLY BLEACHED VOLCANICS' SAME AS ABOVE (59-69)	R-2-4	122	125	3'	1	.2	82
			122-125 SHATTERED ZONE W/ HEAVY HEMATITE							
			COATING ALONG FRACTURES AND PRESENCE OF							
			SMALL QUARTZ VEINLETS							
125	131		ANDESITIC TUFF (SAME AS ABOVE (5-59) W/ QUARTZ -							
			CARBONATE STRINGERS ALONG FRACTURES							

E.O.H. 131' (39.9 m)

DIAMOND DRILL RECORD

PROPERTY RABBITT

HOLE No. DDH - R - 3

DIP TEST		
	Angle	
Footage	Reading	Corrected

Hole No. R-3 Sheet No. L7 Lat.

Section Dep.

Date Begun 10/29/86 Bearing 091°, -44°

Date Finished 10/30/86 Elev. Collar 1400.5 m

Date Logged Dec 4/86

Total Depth 156 (76 m)

Logged By B. A.

Claim GALE GOLD

Core Size BDGM

DEPTH FROM	DEPTH TO	RECOVERY	DESCRIPTION 1' = 30.5cm	SAMPLE No.	FROM	TO	WIDTH OF SAMPLE	Au ppb	Ag ppm	Cu ppm
0	11		OVERBURDEN							
11	52		ANDESITIC TUFF - APHANITIC TO FINE GRAINED							
			MATRIX w/ SUBROUNDED TO SUBANGULAR							
			CLASTS UP TO 7 MM IN DIAMETER. FRACTURES							
			GENERALLY AT 45° TO CA. w/ HEMATITE -							
			LIMONITE AND MANGANESE STAININGS ON							
			FRACTURE PLANS. MINOR QUARTZ AND QUARTZ							
			CARBONATE VEINLETS AND STRINGERS USUALLY							
			PRESENT AS FRACTURE FILLING.							
			11-22.5 HIGHLY FRACTURED AND SHATTERED							
			w/ FeOx STAINS							
			22.5-27 HIGHLY FRACTURED AT 30° 45° TO C.A.							
			DECREASE OF FeOx STAINS FROM (11-22.5)							
			27-32 MORE COMPETENT ZONE w/ CLASTS							
			UP TO 4 MM IN DIAMETER AND PRESENCE OF							
			QUARTZ-CARBONATE COATING ALONG FRACTURES							
			32-33 HIGHLY FRACTURED w/ HEAVY FeOx AND							
			Mn STAINS							
			36 5CM WIDE QUARTZ VEIN w/ FeOx AND	R-3-1	36	38	2'	1	.1	45
			TALC ALONG FRACTURE PLANS.							

NEVILLE CROSBY INC.
TELEPHONE USE-4343

DIAMOND DRILL RECORD

PROPERTY RABBITT

HOLE No. DDH - R - 3

DIP TEST		
	Angle	
Footage	Reading	Corrected

Hole No. R - 3 Sheet No. 2/7 Lat.

Section Dep.

Date Begun Bearing

Date Finished Elev. Collar

Date Logged Dec 4/86

Total Depth 250' (76.2m)

Logged By B. A

Claim

Core Size

DEPTH FROM	DEPTH TO	RECOVERY	DESCRIPTION 1' = 30.5 cm	SAMPLE No.	FROM	TO	WIDTH OF SAMPLE	Au ppb	Ag ppm	Cu ppm
			41 - 44.5 'BLEACHED VOLCANICS' (RECOVERY : 65%)	R-3-2	41	44.5	3½'	29	.1	43
			w/ AT 41.5 SMALL 5CM WIDE, HIGHLY HEMATIZED							
			QUARTZ VEINLET							
			44.5 - 49 ANDESITIC TUFF							
			49 - 52 'BLEACHED VOLCANICS' (RECOVERY : 65%)	R-3-3	49	52	3'	54	.4	59
			INCREASE IN QUARTZ STRINGERS AND SILICE CONTENT							
			HIGHLY HEMATIZED 3CM WIDE ZONE AT 51'							
			STRIKING AT 45° TO C.A. w/ COPPER STAINS TRACES							
52	63		DARK SHALES (SILTSTONE TO MUDSTONE) NUMEROUS							
			QUARTZ STRINGERS. PERVASIVE PYRITE THROUGHOUT							
			UNIT w/ PYRITE AGGREGATES ALONG FRACTURE							
			PLANS. FRACTURES AT 30°-45° TO C.A. SLIGHT							
			BEDDING AT 30°-45° TO C.A. FEW FRACTURES							
			SUBPARALLEL TO C.A. QUARTZ AND QUARTZ -							
			CARBONATE STRINGERS AS FRACTURE FILLING.							
			GRAPHITE PERVASIVE AND AS FRACTURE COATING.							
			58 - 58.5 QUARTZ VEIN w/ DARK SHALE CLASTS	R-3-4	58	58.5	½'	165	.1	16
			WITHIN THE VEIN. NO VISIBLE MINERALIZATION.							
			VEIN AT 45° TO C.A.							
			58.5 - 60 SHEARED ZONE AT 45° TO C.A.							

NEVILLE CROSBY INC.
TELEPHONE USE-4343

DIAMOND DRILL RECORD

PROPERTY RABBITT

HOLE No. DDH-R-3

DIP TEST		
	Angle	
Footage	Reading	Corrected

Hole No. R-3 Sheet No. 3/7 Lat.

Section Dep.

Date Begun Bearing

Date Finished Elev. Collar

Date Logged Dec. 4/86

Total Depth 250' (76.2m)

Logged By B. A.

Claim

Core Size

DEPTH FROM	DEPTH TO	RECOVERY	DESCRIPTION 1' = 30.5cm	SAMPLE No.	FROM	TO	WIDTH OF SAMPLE				
			HIGHLY CLAY ALTERED W/ GRAPHITE AND								
			HEMATITE.								
			62-63 HIGHLY FRACTURED, MOSTLY AT 45° TO CA.								
			W/ HEAVY FeOx STAININGS.								
63	75		ANDESITIC TUFF SAME DESCRIPTION AS ABOVE								
			(11-52) FRACTURES AT 45° 75° TO C A.								
			LOTS OF FeOx STAININGS. FEW QUARTZ STRINGERS								
			69.5 - 70 BRECCIATED ZONE W/ FINE GRAINED								
			MATRIX AND CLASTS UP TO 3CM IN DIAMETER								
			72 HIGHLY FRACTURED (SHEARED?) ZONE								
75	82		SHALE. UPPER CONTACT W/ VOLCANICS AT 60° TO								
			C.A. SAME DESCRIPTION AS ABOVE (52-63)								
			75-76 HIGHLY FRACTURED W/ HEAVY CLAY ALTERATION								
			76 10 CM SHEARED ZONE								
			79.5-80.5 SHEARED ZONE W/ HEAVY CLAY ALTERATION								
			GRAIN SIZE OF UNITS VARIES FROM MUDSTONE								
			TO VERY FINE GRAINED SANDSTONE.								
82	137		'BLEACHED VOLCANICS' W/ ZONES OF ANDESITIC								

DIAMOND DRILL RECORD

PROPERTY RABBITT

HOLE No. DDH - R - 3

DIP TEST		
	Angle	
Footage	Reading	Corrected

Hole No. R - 3 Sheet No. 4/7 Lat. Total Depth 250' (76.2 m)

Section Dep. Logged By B A

Date Begun Bearing Claim

Date Finished Elev. Collar Core Size

Date Logged Dec 4/86

DEPTH FROM	DEPTH TO	RECOVERY	DESCRIPTION 1' = 30.5 cm	SAMPLE No.	FROM	TO	WIDTH OF SAMPLE	Au ppb	Ag ppm	Cu ppm
			TUFF. BLEACHED VOLCANICS ARE WHITISH TO							
			LIGHT GREY, HIGHLY SILICIFIED, FINE TO MEDIUM							
			GRAINED W/ CLASTS UP TO 1 CM IN DIAMETER							
			MOST OF THE CLASTS ARE ~~QUARTZ~~ SUBROUNDED							
			QUARTZ CRYSTALS.							
			82-85 MEDIUM GRAINED W/ NUMEROUS QUARTZ	R-3-5	82'	85'	3'	4	.1	61
			STRINGERS UP TO 1 CM WIDE.							
			89-91 FRACTURES AT 30° TO C.A AND SUBPARALLEL	R-3-6	89'	91'	2'	1	.1	24
			TO C A. HEAVY Mn AND FeOx STAININGS ALONG							
			FRACTURES							
			91-94 MORE COMPETENT ZONE W/ DECREASE IN							
			QUARTZ STRINGERS CONTENT.							
			94-95 HIGHLY FRACTURED							
			95-98 FRACTURED AT 45° TO C A. (MORE							
			COMPETENT THAN 94-95							
			98-101 HIGHLY FRACTURED WITH SMALL SHEARED							
			ZONES W/ CLAY ALTERATION							
			101-111.5 MORE COMPETENT W/ FRACTURES AT							
			30°-45° TO C A							
			111 5 CM WIDE SHEARED ZONE : CLAY							
			111.5-113.5 GREENISH ANDESITIC TUFF							

DIAMOND DRILL RECORD

PROPERTY RABBITT

HOLE No. DDH - R - 3

DIP TEST		
	Angle	
Footage	Reading	Corrected

Hole No. R-3 Sheet No. 5/7 Lat.

Section Dep.

Date Begun Bearing

Date Finished Elev. Collar

Date Logged Dec 4/86

Total Depth 250' (76.2m)

Logged By B.A.

Claim

Core Size

DEPTH FROM	DEPTH TO	RECOVERY	DESCRIPTION 1' = 30.5 cm	SAMPLE No.	FROM	TO	WIDTH OF SAMPLE	Au ppb	Ag ppm	Cu ppm
			113.5 - 115.5 GREY BRECCIATED ZONE w/ CLASTS							
			UP TO 3 CM IN DIAMETER							
			115.5 - 117 NUMEROUS QUARTZ STRINGERS AND	R-3-7	115.5	117'	1½'	1	.1	30.
			5 CM VEIN AT 116'							
			117 - 123 LIGHT GREY-GREEN w/ QUARTZ CLASTS							
			UP TO 1 CM IN DIAMETER - QUARTZ STRINGERS							
			AND FRACTURES AT 45° TO C.A.							
			123 - 124 FRACTURE ZONE w/ QUARTZ INJECTIONS							
			AT 30° TO CA. TO SUBPARALLEL TO C.A.							
			124 - 125 BRECCIATED ZONE w/ CLASTS UP TO							
			2 CM IN DIAMETER.							
			125 - 133 GREY-GREENISH FINE GRAINED MATRIX							
			w/ CLASTS UP TO 2 CM IN DIAMETER							
			135 - 136 FRACTURED ZONE w/ Mn AND FeOx							
			STAINING NUMEROUS AND ABUNDANT QUARTZ							
			STRINGERS AND VEINLETS AT 60° TO C.A.							
			126 BRECCIATED ZONE, 5 CM WIDE WITH ABUNDANT							
			FeOx AND CLAY							
			133 - 137 GREY - TUFFACEOUS - SILICE RICH							
137	250		SILICEOUS ANDESITIC TUFF TO BRECCIA.							

NEVILLE CROSBY INC.
TELEPHONE USE-4343

DIAMOND DRILL RECORD

PROPERTY RABBITT

HOLE No. DDH-R-3

DIP TEST		
	Angle	
Footage	Reading	Corrected

Hole No. R-3 Sheet No. 6/7 Lat. Total Depth 250' (76.2m)

Section Dep. Logged By B.A.

Date Begun Bearing Claim

Date Finished Elev. Collar Core Size

Date Logged Dec 4/86

DEPTH FROM	DEPTH TO	RECOVERY	DESCRIPTION 1' = 30.5cm	SAMPLE No.	FROM	TO	WIDTH OF SAMPLE	Au ppb	Ag ppm	Cu ppm
			GREYISH, FINE GRAINED MATRIX W/ CLASTS OF							
			FINE GRAINED ANDESITIC TUFF AND QUARTZ UP TO							
			3 CM IN DIAMETER							
			FRACTURES VARYING FROM PERPENDICULAR TO							
			PARALLEL TO CA., BUT MOSTLY AT 45° TO CA.							
			Mn AND FeOx STAININGS ALONG FRACTURES.							
			QUARTZ-CARBONATE STRINGERS AS FRACTURE FILLINGS							
			PRESENCE OF OCCASIONAL QUARTZ SWELLS							
			144-145 HIGHLY FRACTURED	R-3-8	147'	148'	2'	1	.1	16
			163-165.5 HIGHLY FRACTURED (RECOVERY 20%)							
			FROM 165.5 TO E.O.H INCREASE IN SILICE CONTENT							
			167.5 10 CM WIDE FRACTURED ZONE W/ ABUNDANT							
			CLAY AND Mn STAININGS							
			178-182 FRACTURED WITH CHLORITE ALTERATION	R-3-9	178'	182'	4'	1	.1	24
			W/ ABUNDANT CLAY. INCREASE IN QUARTZ STRINGER							
			CONTENT MAINLY PRESENT AS FRACTURE FILLING.							
			186.5-187.9 HIGHLY FRACTURED ZONE W/ TALC							
			ON FRACTURE PLANS.							
			196-197 SHATTERED ZONE. CHERTY							
			203-205 HIGHLY FRACTURED W/ MINOR PY AND	R-3-10	203	205	2'	1	.1	26
			EPIDOTE.							

NEVILLE CROSBY INC.
TELEPHONE USE-4343

DIAMOND DRILL RECORD

PROPERTY RABBITT

HOLE No. DDH - R - 3

DIP TEST		
	Angle	
Footage	Reading	Corrected

Hole No. R - 3 Sheet No. 7/7 Lat. Total Depth 250' (76.2 m)

Section Dep. Logged By B. A.

Date Begun Bearing Claim

Date Finished Elev. Collar Core Size

Date Logged

DEPTH FROM	DEPTH TO	RECOVERY	DESCRIPTION 1' = 30.5 cm	SAMPLE No.	FROM	TO	WIDTH OF SAMPLE				
			216 - 217 FRACTURED W/ TALC APPROX 30° TO C.A.								
			217 - 218 SHATTERED								
			222 - 224 SHATTERED - NO ALTERATION								
			233 235 FRACTURED AT 30° TO SUBPARALLEL TO								
			C.A. ABUNDANT Mn AND FeOx STAININGS								
			238 - 238.5 SHATTERED SAME AS ABOVE (233 235)								
			239 - 240.5 SAME AS ABOVE (238 - 238.5)								
			241 - 242.5 SAME AS ABOVE (238 - 238.5)								
			250' E.O.H.								

NEVILLE CROSBY INC.
TELEPHONE USE-4343

DIAMOND DRILL RECORD

PROPERTY RABBITT

HOLE No. DDH - R - 4

DIP TEST		
	Angle	
Footage	Reading	Corrected

Hole No. R-4 Sheet No. 42 Lat. _____ Total Depth 145 (45.1 m)

Section _____ Dep. _____ Logged By B.A.

Date Begun OCT 31/86 Bearing 132°, -64° Claim GAIL GOLD

Date Finished NOV 1/86 Elev. Collar 1400.5 m. Core Size BDGM

Date Logged DEC 3/86

DEPTH FROM	DEPTH TO	RECOVERY	DESCRIPTION 1' = 30.5 cm	SAMPLE No.	FROM	TO	WIDTH OF SAMPLE	Au ppb	Ag ppm	Cu ppm
0	8		OVERBURDEN							
8	18		SHATTERED ANDESITIC TUFF. FINE GRAINED MATRIX							
			W/ CLASTS UP TO 5MM IN DIAMETER							
			NUMEROUS FRACTURES VARYING FROM PERPENDICULAR							
			TO PARALLEL TO C.A.							
			VARIOUS AMOUNTS OF HEMATITE + LIMONITE + MANGANESE							
			STAININGS ALONG FRACTURE PLANS							
18	98.5		ANDESITIC TUFF - APHANITIC TO FINE GRAINED							
			MATRIX WITH CLASTS UP TO 7MM IN DIAMETER							
			(SUBROUNDED) - NUMEROUS FRACTURES VARYING							
			FROM 30° TO PERPENDICULAR TO C.A. W/							
			HEMATITE + LIMONITE + MANGANESE STAININGS.							
			QUARTZ-CARBONATE STRINGERS AND VEINLETS							
			PRESENT MOSTLY AS FRACTURE FILLING.							
			24-27 INCREASE OF QUARTZ-CARBONATE STRINGERS	R-4-A	24	27	3'	3	.1	65
			CONTENT. VEINLETS UP TO 3CM WIDE.							
			29.5-32 SAME AS ABOVE (24-27)	R-4-B	29.5	32	2½'	1	.1	68
			53-61 INCREASE IN SILICE CONTENT							
			61-98.5 BACK TO ANDESITIC TUFF, RELATIVELY	R-4-C	58	61	3'	2	.1	24

DIAMOND DRILL RECORD

PROPERTY RABBITT

HOLE No. DDH - R - 4

DIP TEST		
	Angle	
Footage	Reading	Corrected

Hole No. R-4 Sheet No. 2/2
Section
Date Begun
Date Finished
Date Logged Dec 3/86

Lat.
Dep.
Bearing
Elev. Collar.

Total Depth 148 (45.1m)
Logged By B.A
Claim
Core Size

DEPTH FROM	DEPTH TO	RECOVERY	DESCRIPTION 1' = 0.305 m	SAMPLE No.	FROM	TO	WIDTH OF SAMPLE	Au ppb	Ag ppm	Cu ppm
			SILICIFIED w/ FRACTURES AND STRINGERS AT	R-4-1	101	105	4'	34	.1	38
			30° TO PARALLEL TO C.A.							
				R-4-2	105	107	2'	88	.4	28
98.5	108.5		'BLEACHED VOLCANICS' WHITISH, HIGHLY SILICIFIED							
			OF PROBABLE ANDESITIC ORIGIN. NUMEROUS	R-4-3	107	110	3	5	.1	17
			QUARTZ-CARBONATE STRINGERS AND VEINLETS AT							
			45° TO PARALLEL TO CA. UP TO 5CM WIDE.	R-4-4	113.5	116.5	3'	42	.2	55
			TRACES OF COPPER STAINING. MINOR PERVASIVE							
			PYRITE.	R-4-5	120	122	2'	7	.1	56
108.5	114		ANDESITIC TUFF SAME DESCRIPTION AS ABOVE	R-4-6	133.5	136	2½'	96	.1	35
			(18 - 98.5)							
				R-4-7	136	138.5	2½'	74	.5	10
114	146		'BLEACHED VOLCANICS' SAME DESCRIPTION AS							
			ABOVE (98.5 - 108.5) INCREASE IN COPPER	R-4-8	138.5	141	2½'	98	.2	25
			STAINING CONTENT							
			126.5 10 CM WIDE SHEARED ZONE w/ HEMATITE	R-4-9	141	143	2'	51	.4	18
			STAININGS. SHEAR AT 35° TO CA.							
146	148		ANDESITIC TUFF - SAME AS ABOVE (18 - 98.5)							
			E.O.H. = 148'							

DIAMOND DRILL RECORD

PROPERTY RABBIT

HOLE No. DDH R-5

DIP TEST		
	Angle	
Footage	Reading	Corrected

Hole No. DDH R-5 Sheet No. 1 Lot.
Section Dep.
Date Begun Nov 2/86 Bearing 055, -65°
Date Finished Nov 3/86 Elev. Collar 1400.5
Date Logged Nov. 20

Total Depth 150' (45.72m)
Logged By C.N.
Claim Gail Gol-
Core Size BQGM

DEPTH FROM	DEPTH TO	RECOVERY	DESCRIPTION 1' = 30.5cm	SAMPLE No.	FROM	TO	WIDTH OF SAMPLE	Au ppb	Ag ppm	Cu ppm
0	14'	23%	VOLCANIC BRECCIA - BASIC ANDESITE IN							
14'	17'	55%	COMPOSITION; REWORKED - ALTERATION CHLORITE,							
17'	53.5	55%	CLAY + CARBONATE, TRACE DISSEMINATED PY;							
			SOME CARBONATE NODULES + VEINS AS WELL AS							
			THE DISSEMINATED CARBONATE IN THE							
			GROUNDMASS; BRECCIA CLASTS COMPRISE							
			5-10% OF ROCK; TRACE QUARTZ VEINLETS							
			SOME ARE OFFSET BY FRACTURES							
			0-18': BLOCKY + PEBBLY, UNCONSOLIDATED	DDH R5-1	14'	18'	4'	1	.1	51
			ROCK FRAGMENTS, SOME OXIDES PRESENT							
			39.7-42.0': ZONE WITH ABUNDANT CALCITE VEINING	DDH R5-2	39.7	42'	2.3'	52	.1	84
			+ NODULES							
			46-47': STRONGLY ALTERED VOLCANIC ZONE	DDH R5-3	46'	47'	1.0'	4	.3	60
			STRONG LIMONITE ALTERATION, SOME BLACK							
			OXIDES ALSO PRESENT; STRONGLY CALCAREOUS							
53.5	63.0'	95%	BLACK ARGILLITE: CONTAINS MINOR INTERBEDS							
			OF SILTSTONE; ARGILLITE IS FETID; LOCALLY	DDH R5-4	53.5'	56.5'	3.0'	150	.2	29
			GRAPHITIC; CONTAINS ~5% PY, DISSEMINATED	DDH R5-5	56.5'	59'	2.5'	54	.2	52
			+ LENS ALONG BEDDING; BEDDING 38° TO C/A;	DDH R5-6	59'	61.5'	2.5'	88	.7	67
			CONTAINS ~5% QUARTZ IN STRINGERS + VEINS	DDH R5-7	61.5'	63.0'	1.5'	62	.3	34
			TO 2 INCHES WIDE, QUARTZ IS MASSIVE WHITE							

DIAMOND DRILL RECORD

PROPERTY RABBITT

HOLE No. DDH. R-5

DIP TEST		
	Angle	
Footage	Reading	Corrected

Hole No. DDH R5 Sheet No. 2 Lat. Total Depth 150'

Section Dep. Logged By C.N.

Date Begun Bearing Claim

Date Finished Elev. Collar Core Size

Date Logged Nov. 20

DEPTH FROM	DEPTH TO	RECOVERY	DESCRIPTION 1' = 30.5 cm	SAMPLE No.	FROM	TO	WIDTH OF SAMPLE	Au ppb	Ag ppm	Cu ppm
			WITH TRACE LIMONITE; LARGER QUARTZ ZONES							
			CONTAIN CLASTS OF ARGILLITE.							
63.0'	64.0'	35%	UNCONSOLIDATED, ROUNDED VOLCANIC FRAG-	DDH R5-8	63.0	64.0	1.0'	2	.1	49
			MENTS. POSSIBLE SHEAR ZONE.							
64.0	64.8'	90%	QUARTZ VEIN - MASSIVE, WHITE; CONTAINS	DDH R5-9	64.0	64.8	0.8'	185	.1	5
			TRACE CALCITE; CONTAINS 15% CLASTS							
			OF PYRITIFEROUS ARGILLITE.							
64.8	66.3'	85%	BLACK ARGILLITE: SIMILAR TO THAT ABOVE,	DDH R5-10	64.8	66.3	1.5'	14	.5	52
			CONTAINS ONE 1/2" QUARTZ-CARBONATE-							
			LIMONITE VEIN; ARGILLITE CONTAINS							
			MODERATE AMOUNTS OF LIMONITIC ALTERATION-							
			MODERATELY CALCAREOUS - ANKERITE?							
66.3'	68.1'	100%	MODERATE TO STRONGLY ALTERED VOLCANICS -	DDH R5-11	66.3	68.1'	1.8'	25	.1	69
			VOLCANIC IS SILICIFIED + BLEACHED; LOCALLY							
			CALCAREOUS - MATRIX + STRINGERS; MINOR AMOUNT							
			OF ARGILLITE FRAGMENTS - 2% - PRESENT, ≤5%							
			PY - FINE + COARSE DISSEMINATIONS -							
			MODERATELY ASSOCIATED WITH LIMONITE.	DDH R5-12	68.1	68.8'	0.7'	3	.6	57
68.1'	68.8'	95%	INTERBEDDED VOLCANIC + ARGILLITE -							
			MODERATELY LIMONITIC; MINOR CARBONATE;							
			BEDDING 30° TO C/A.							

DIAMOND DRILL RECORD

PROPERTY RABBITT

HOLE No. DDH R-5

DIP TEST		
	Angle	
Footage	Reading	Corrected

Hole No. DDH R-5 Sheet No. 3
Section
Date Begun
Date Finished
Date Logged Nov. 20

Lat.
Dep.
Bearing
Elev Collar.

Total Depth 150'
Logged By G. N.
Claim
Core Size

DEPTH FROM	DEPTH TO	RECOVERY	DESCRIPTION 1' = 30.5 cm	SAMPLE No.	FROM	TO	WIDTH OF SAMPLE	Au ppb	Ag ppm	Cu ppm
68.8	69.9	100%	WEAKLY ALTERED VOLCANIC - MINOR QUARTZ	DDHR5-13	68.8	69.9	1.1'	10	.1	56
			STRINGERS, WEAK LIMONITE ALTERATION,							
			TRACE CARBONATE ON FRACTURE SURFACES;							
			CONTAINS ~10% ARGILLITE CLASTS,							
69.9'	72.5'	70%	BLACK ARGILLITE - ≤1% Py, FINE GRAINED,	DDHR5-14	69.9	70.8	0.9'	7	.1	46
			DISSEMINATED; TRACE QUARTZ CARBONATE							
			VEINING; LIMONITE STAINING ON SOME SURFACES							
			70.8 - 71.0' - QUARTZ-CARBONATE - VOLCANIC? ZONE	DDHR5-15	70.8	71.0'	0.2'	3	.5	45
			2-3% FINE GRAINED DISSEMINATED Py.	DDHR5-16	71.0	72.5	1.5'	43	.2	74
72.5	77.8	100%	PORPHYRITIC FLOW BRECCIA - ~40% FELDSPAR,							
			~10% FELDSPAR PORPHYRY CLASTS; TRACE QUARTZ							
			CARBONATE STRINGERS.							
77.8	100.5'	97%	CLASTIC SEDIMENTS - FROM MEDIUM GRAINED							
			BRECCIA TO MEDIUM GRAINED GREYWACKE,							
			TRACE AMOUNTS OF SUBANGULAR ARGILLITE							
			FRAGMENTS TO 1CM LONG; ≤15% ROUNDED,							
			SMALL FRAGMENTS OF ARGILLITE; MATRIX IS							
			WEAK TO STRONGLY CALCAREOUS; MINOR QUARTZ							
			STRINGERS & VEINS PRESENT; LOCALLY ABUNDANT							
			CALCITE STRINGERS; LOCALLY THE SEDIMENTS							
			HAVE BEEN BRECCIATED BY CALCITE & QUARTZ							

DIAMOND DRILL RECORD

PROPERTY RABBITT

HOLE No. DDH R-5

DIP TEST		
	Angle	
Footage	Reading	Corrected

Hole No. DDH R-5 Sheet No. 4.
Section
Date Begun
Date Finished
Date Logged

Lat.
Dep.
Bearing
Elev. Collar

Total Depth 150'
Logged By C. N.
Claim
Core Size

DEPTH FROM	DEPTH TO	RECOVERY	DESCRIPTION 1' = 30.5 cm	SAMPLE No.	FROM	TO	WIDTH OF SAMPLE
			94.5-95.9, - CALCITE POOR MATRIX				
100.5	114.1	99%	ARKOSIC SEDIMENTS - GRADATIONAL CONTACT WITH	RS-TS #3	113'	—	PETROGRAPHIC SAMPLE
			ABOVE UNIT, ABUNDANT FELDSPAR; FOLIATED -				
			~ 80° TO C/A, SMALL LITHIC (ARGILLITE)				
			CLASTS NOT AS ABUNDANT ~5%, MATRIX				
			CALCAREOUS; FEW CALCITE STRINGERS, QUARTZ				
			OCCURS IN TRACE AMOUNTS.				
114.1	131.8	98%	VOLCANIC BRECCIA - MATRIX EXTREMELY CHLORI-				
			TIZED, CONTAINS ≤15% ANGULAR TO ROUNDED				
			CLASTS, - CLASTS ARE GENERALLY CHERTY,				
			~5% QUARTZ VEINS; TRACE CALCITE WITH				
			QUARTZ VEINS; CHERTY CLASTS MAY BE QTZ PHENOCRYSTS.				
			119-127'; STILL BRECCIA BUT FROM A FELDSPAR				
			PORPHYRY FLOW - ≈30% OF MATRIX IS				
			FELDSPAR PHENOCRYSTS; CONTAINS CLASTS OF				
			THE ABOVE BRECCIA.				
			127-131.8, - STILL BRECCIA BUT MATRIX IS				
			AN ALTERED AUGITE PORPHYRY, - AUTO BRECCIATED				
			WITH ADDITIONAL CHERTY CLASTS				
131.8	132.4	100%	GRAYWACKE?; MEDIUM GRAINED, UPPER CONTACT				
			45°, LOWER CONTACT 70°				

NEVILLE CROSBY INC.
TELEPHONE USE-4343

DIAMOND DRILL RECORD

PROPERTY RABBITT

HOLE No. DDH R-5

DIP TEST		
	Angle	
Footage	Reading	Corrected

Hole No. DDH R-5 Sheet No. 5

Section

Date Begun

Date Finished

Date Logged Nov. 29

Lat.

Dep.

Bearing

Elev. Collar

Total Depth 150'

Logged By C. N.

Claim

Core Size

DEPTH FROM	DEPTH TO	RECOVERY	DESCRIPTION 1' = 30.5 cm	SAMPLE No.	FROM	TO	WIDTH OF SAMPLE				
132.4	150'	98%	VOLCANIC BRECCIAS - AS ABOVE; VARY								
			IN APPEARANCE; CLASTS MAKE UP 1-10%								
			OF CORE								
150'	—		END OF HOLE								

NEVILLE CROSBY INC.
TELEPHONE USE-4343

DIAMOND DRILL RECORD

PROPERTY RABBITT

HOLE No. DDH - R - 6

DIP TEST		
	Angle	
Footage	Reading	Corrected

Hole No. R-6 Sheet No. 1 Lat.

Section Dep.

Date Begun 3 Nov / 86 Bearing 086, -46°

Date Finished 4 Nov / 86 Elev. Collar 1414.2 m

Date Logged Nov 21, 86

Total Depth 142' (43.3m)

Logged By R. A.

Claim GAIL GOLD

Core Size BDGM

DEPTH FROM	DEPTH TO	RECOVERY	DESCRIPTION 1' = 30.5 cm	SAMPLE No.	FROM	TO	WIDTH OF SAMPLE	Au ppb	Ag ppm	Cu ppm
0	11	—	OVERBURDEN							
				R-6-1	60	62.5	2½'	5	.1	34
11'	59½'	95%	ANDESITIC TUFF APHANITIC TO							
			FINE GRAINED MATRIX WITH CLASTS (UP TO	R-6 2	62.5	62.8	4'	195	.4	8
			5MM). RELATIVELY MASSIVE,							
			11-19 HIGHLY SLATTERED ROCK WITH	R-6-3	62.8	65	2.2'	20	.1	14
			LIMONITE - HEMATITE - MANGANESE STAININGS							
			ALONG FRACTURES AND CRACKS	R-6-4	65	65.5	½'	68	.7	37
			PERVASIVE CHLORITIC ALTERATION AND							
			MINOR GRAPHITE COATING ALONG FRACTURES	R-6-5	65.5	69.5	4'	34	.4	14
			19-34 MORE MASSIVE. FEW QZ STRINGERS							
			AS FRACTURE FILLINGS. TRACE OF	R-6-6	69.5	72	2½	56	.3	13
			PERVASIVE PYRITE							
			34-43 COARSER GRAINED, INCREASE OF QZ	R-6-7	72	77.5	5½	390	.1	18
			STRINGERS CONTENT.							
			43-54 MORE MASSIVE, FINER GRAINED	R-6-8	77.5	79	1½	37	.3	48
			54-59½ COARSER GRAINED INCREASE OF							
			QZ STRINGERS. PRESENCE OF CLAST UP							
			TO 1" IN Ø							

DIAMOND DRILL RECORD

PROPERTY RABBITT

HOLE No. DDH-R-6

DIP TEST		
	Angle	
Footage	Reading	Corrected

Hole No. R-6 Sheet No 2 Lat. Total Depth

Section Dep. Logged By B. A.

Date Begun Bearing Claim

Date Finished Elev. Collar. Core Size.

Date Logged Dec. 3/86

DEPTH FROM	DEPTH TO	RECOVERY	DESCRIPTION 1' = 30.5 cm	SAMPLE No.	FROM	TO	WIDTH OF SAMPLE				
59½	61.5		HIGHLY SILICIFIED ZONE. APHANITIC. MINOR								
			SMALL PYRITE CRISTALS - CHLORITE + EPIDOTE								
			ALTERATION ALONG FRACTURES								
			61-61.5 QZ VEIN : MILKY QZ WITH MINOR								
			PYRITE ON CRACKS AND WITHIN ARGILLITE								
			CLASTS.								
61.5	77		DARK GREY. APHANITIC ARGILLITE.								
			SMALL PYRITE CRISTALS UP TO 1% - 2%								
			SILICE CONTENT INCREASE TOWARDS THE								
			BOTTOM AS WELL AS QZ STRINGERS CONTENT								
			PRESENCE OF TWO QZ VEINING GENERATION								
			GRAPHITE PRESENT ALONG FRACTURE.								
			SOME FRACTURES SHOW IRON (HEMATITE)								
			AND LIMONITE STAININGS.								
			FRACTURES @ 25° TO 50° TO CA. WITH								
			MINOR FRACTURING SUBPARALLEL TO CA.								
			PYRITE PERVASIVE THROUGHOUT UNIT								
			AND NOT RESTRICTED TO FRACTURES PLANS								
77	82		INTERLAYERED SILICIFIED ARGILLITE AND								

DIAMOND DRILL RECORD

PROPERTY RABBITT

HOLE No. DDH-R-6

DIP TEST		
	Angle	
Footage	Reading	Corrected

Hole No. R-6 Sheet No. 3 Lat. Total Depth 142'

Section Dep. Logged By

Date Begun Bearing Claim

Date Finished Elev. Collar. Core Size.

Date Logged

DEPTH FROM	DEPTH TO	RECOVERY	DESCRIPTION 1' = 30.5 cm	SAMPLE No.	FROM	TO	WIDTH OF SAMPLE				
			SILICIFIED ANDESITIC TUFF - PERVASIVE								
			PYRITE THROUGHOUT BOTH UNITS.								
84	125		TUFFACEOUS ANDESITE - APHANITIC TO FINE								
			GRAINED MATRIX WITH CLASTS UP TO 1CM ⌀								
			QZ STRINGERS THROUGHOUT UNIT, USUALLY								
			ALONG FRACTURES (UP TO 1" WIDE)								
			FRACTURES @ 30°-50° TO CA.								
			LIMONITE AND HEMATITE STAININGS ALONG								
			SOME FRACTURES.								
			SLIGHT INCREASE IN SILICE CONTENT TOWARDS								
			THE BOTTOM OF HOLE.								
			TRACES OF PYRITE								
			121.5 - 123 HIGHLY BROKEN UP								
			CHLORITIC ALTERATION & MORE HEMATITE								
			AND LIMONITE STAINING.								
125	142		APHANITIC, GREY								
			PRESENCE OF CLASTS.								
			PYRITE PERVASIVE THROUGHOUT ROCK								
			AND ALONG FRACTURES.								

DIAMOND DRILL RECORD

PROPERTY RABBITT

HOLE No. DDH-R-6

DIP TEST		
	Angle	
Footage	Reading	Corrected

Hole No. R-6 Sheet No. 4

Section

Date Begun

Date Finished

Date Logged

Lat.

Dep.

Bearing

Elev. Collar

Total Depth

Logged By

Claim

Core Size

DEPTH FROM	DEPTH TO	RECOVERY	DESCRIPTION 1'=30.5cm	SAMPLE No.	FROM	TO	WIDTH OF SAMPLE	Au ppb	As ppm	Cu ppm
			SLIGHTLY 'BEDDED'							
			FRACTURES @ 30° TO SUBPERPENDICULAR							
			TO C.A. QZ VEINLETS UP TO 5 CM WIDE.							
			128-130.5 HIGHLY BROKEN UP, CLAY							
			ALTERED WITH MINOR GRAPHITE ALONG	R-6-A	131.5	135.5	4'	1	.1	63
			FRACTURES.							
			LIMONITE + HEMATITE ALONG FRACTURES.							
			130.5-138 MORE MASSIVE							
			140-142 CLAY ALTERED - SHEARED							
			ZONE							
			142 E.O.H.							

NEVILLE CROSBY INC.
TELEPHONE USE-4343

DIAMOND DRILL RECORD

PROPERTY RABBITT

HOLE No. DDH - R-7

DIP TEST		
	Angle	
Footage	Reading	Corrected

Hole No. R-7 Sheet No. 1 Lat.

Section Dep.

Date Begun Nov 3, 1986 Bearing 142°, -44°

Date Finished Nov 4, 86 Elev. Collar. 1414.2

Date Logged Dec 3/86

Total Depth 107' (32.6m)

Logged By B.A.

Claim GAIL GOLD

Core Size BDGM

DEPTH FROM	DEPTH TO	RECOVERY	DESCRIPTION 1'=30.5cm	SAMPLE No.	FROM	TO	WIDTH OF SAMPLE	Au ppb	Ag ppm	Cu ppm
0	7	–	OVERBURDEN							
7	15		ANDESITIC TUFF. FINE GRAINED MATRIX W/							
			CLASTS UP TO 5 MM IN DIAMETER.							
			7-12: UNIT VERY SHATTERED							
			HEMATITE + LIMONITE + MANGANESE STAININGS							
			ESPECIALLY ALONG FRACTURE PLANS							
			PRESENCE OF QUARTZ AND CARBONATE STRINGERS							
			AND VEINLETS, MOSTLY ALONG FRACTURES							
15	25		ANDESITE BRECCIA. FINE GRAINED TO APHANITIC							
			MATRIX W/ CLASTS UP TO 5 CM IN DIAMETER							
			NUMEROUS FRACTURES AT 45° AND SUBPERPENDICULAR							
			TO C.A. MINOR PYRITE PERVASIVE THROUGHOUT							
			UNIT. OCCASIONAL QUARTZ SWELLS DEVELOPED							
			AROUND FRACTURES. MINOR HEMATITE STAININGS.							
			23.5-25 INCREASE IN SILICE CONTENT.	R-7-1	23.5	25	1½'	6	.1	51
			INCREASE OF QUARTZ-CARBONATE STRINGERS.							
25	50		ANDESITIC TUFF: SAME DESCRIPTION AS ABOVE							
			(7-15). MINOR PERVASIVE PYRITE (< 1%)							

DIAMOND DRILL RECORD

PROPERTY RABBITT

HOLE No. DDH - R - 7

DIP TEST		
	Angle	
Footage	Reading	Corrected

Hole No. R-7 Sheet No. 2 Lat. Total Depth 107' (32.6m)

Section Dep. Logged By B.A.

Date Begun Bearing Claim

Date Finished Elev. Collar Core Size

Date Logged Dec 3/86

DEPTH FROM	DEPTH TO	RECOVERY	DESCRIPTION 1' = 30.5 cm	SAMPLE No.	FROM	TO	WIDTH OF SAMPLE	Au ppb	Ag ppm	Cu ppm
			PRESENCE OF FRACTURES PARALLEL TO C.A.							
			W/ MINOR HEMATITE STAINING.							
			43-45 SLIGHT INCREASE IN SILICE CONTENT							
			QUARTZ STRINGERS SHOW 2 QUARTZ GENERATIONS							
50	51.5		HIGHLY SILICIFIED ZONE W/ 5CM (?) SHEARED	R-7-2	50	51.5	1½'	20	.2	71
			ZONE AT 51'. SHEARED ZONE EXTREMELY RUSTY							
			MOSTLY HEMATITE W/ CLAY ALTERATION ALONG							
			FRACTURE PLANS.							
51.5	107		ANDESITIC TUFF - SAME DESCRIPTION AS ABOVE							
			(7-15)							
			HEMATITE + LIMONITE AND MANGANESE STAINING							
			ALONG FRACTURES							
			FRACTURES AT 45°, PERPENDICULAR OR PARALLEL							
			TO CA.							
			62-67 HIGHLY SILICIFIED, BRECCIATED ZONE	R-7-3	62	67	5'	3	.1	45
			W/ 10 CM WIDE SHEARED ZONE AT 45° TO C.A							
			(AT 64.5). CHLORITE AND TALC (SERPENTINIZATION)							
			ALONG SHEARED ZONE.							
			QUARTZ-CARBONATE STRINGERS AND VEINLETS							

NEVILLE CROSBY INC.
TELEPHONE USE-4343

DIAMOND DRILL RECORD

PROPERTY RABBITT

HOLE No. DDH R-8

DIP TEST		
	Angle	
Footage	Reading	Corrected

Hole No. DDH R-8 Sheet No. 1
Section
Date Begun 4 NOV, 86
Date Finished 5 NOV, 86
Date Logged DEC 2

Lat.
Dep.
Bearing 097, -66.5°
Elev. Collar 1414.2 m

Total Depth 167' (50.9m)
Logged By C.N.
Claim GAIL GOLD
Core Size BDGM

DEPTH FROM	DEPTH TO	RECOVERY	DESCRIPTION 1' = 30.5 cm	SAMPLE No.	FROM	TO	WIDTH OF SAMPLE	Au ppb	Ag ppm	Cu ppm
0	10	60%	AUGITE PORPHYRY - PHENOCRYSTS TO 1/8";							
			PHENOCRYSTS MAKE UP ≤20% OF ROCK; TRACE							
			QUARTZ STRINGERS; FE OXIDES ON FRACTURE							
			SURFACES; LOCALLY WEAKLY BRECCIATED, WEAKLY							
			CHLORITIZED; CORE VERY BLOCKY							
10	18	80%	VOLCANIC FLOW BRECCIA - CLASTS UP 1½";							
			AUTO BRECCIATED; QUITE SIMILAR TO THE							
			AUGITE PORPHYRY IN APPEARANCE; TRACE							
			CARBONATE, TRACE QUARTZ STRINGERS,							
			HEMATITE & OTHER OXIDES ON FRACTURE SURFACES							
			CORE IS BLOCKY							
18	40.2	90%	AUGITE PORPHYRY: AS ABOVE, UP TO 2%							
			QUARTZ VEINLETS							
			18-24.5: CORE IS FINE GRAINED, MORE STRONGLY							
			CLAY ALTERED, AUGITE PHENOCRYSTS ≤3% + SMALL							
			38.5-39: CORE IS SLIGHTLY BLEACHED + BRECCIATED							
			BY A SMALL QUARTZ ZONE							
40.2	41.3	100%	BLEACHED VOLCANICS - FINE GRAINED, SILICIFIED	DDH RB-1	40.2	41.3	1.1'	1	.1	55
			CLAY ALTERED; 1% PY FINE GRAINED DISSEMIN-							
			ATED; CENTRAL PORTION OF ZONE STRONGLY							
			LIMONITIZED; TRACE CARBONATE PRESENT;							

DIAMOND DRILL RECORD

PROPERTY RABBITT

HOLE No. DDH R-8

DIP TEST		
	Angle	
Footage	Reading	Corrected

Hole No. DDH R-8 Sheet No. 2
Section
Date Begun
Date Finished
Date Logged DEC. 2

Lat.
Dep.
Bearing
Elev. Collar.

Total Depth 167'
Logged By C.N.
Claim
Core Size. BDGM

DEPTH FROM	DEPTH TO	RECOVERY	DESCRIPTION 1' = 30.5 cm	SAMPLE No.	FROM	TO	WIDTH OF SAMPLE	Au ppb	Ag ppm	Cu ppm
			ALTERATION LESS INTENSE DOWNHOLE - CONSISTS							
			OF CHLORITIZATION + MODERATE LIMONITE STAIN.							
41.3	66	98%	AUGITE PORPHYRY - AS ABOVE							
			58.6-59 3/4" QUARTZ VEIN SURROUNDED							
			BY LIGHTLY BLEACHED ZONE.							
66	76.2	100%	ANDESITE - LIGHT TO DARK GREEN, LOCALLY							
			MOTTLED; GRADATIONAL CONTACTS; MINOR							
			QUARTZ VEINLETS.							
			69.5 - 70.6 : LIGHTLY BLEACHED/CHLORITIZED	DDH R8-2	68.5	70.6	2.1'	2	.2	59
			ZONE SURROUNDING A 1" WHITE TO TRANSLUCENT							
			QUARTZ VEIN AT 69'. QUARTZ IS STRONGLY							
			LIMONITE STAINED; QUARTZ @ 25° TO C/A.							
76.2	87.2	100%	FELDSPAR PORPHYRY: 20% PHENOCRYSTS IN A							
			CHLORITIC GROUNDMASS; MINOR QUARTZ VEINLETS							
			2 AGES OF QUARTZ; TRACE CALCITE; MINOR							
			HEMATITE ON SOME FRACTURE SURFACES, SOME							
			LIMONITE ON FRACTURE SURFACES + WITH QUARTZ							
			≈2% PY ALONG FRACTURE SURFACES							
87.2	123.5	98%	INTERBEDDED BLACK ARGILLITE AND SANDSTONE:							
			CONTACT WITH FELDSPAR PORPHYRY @ 29° TO C/A							
			(IRREGULAR) BEDDING @ 68° TO C/A							

DIAMOND DRILL RECORD

PROPERTY RABBITT

HOLE No. DDH R-8

DIP TEST		
	Angle	
Footage	Reading	Corrected

Hole No. DDH R8 Sheet No. 3
Section
Date Begun
Date Finished
Date Logged DEC. 2

Lat.
Dep.
Bearing
Elev. Collar

Total Depth 167'
Logged By C. N.
Claim
Core Size BDGM

DEPTH FROM	DEPTH TO	RECOVERY	DESCRIPTION 1' = 30.5 cm	SAMPLE No.	FROM	TO	WIDTH OF SAMPLE	Au ppb	Ag ppm	Cu ppm
			BLACK ARGILLITE - LOCALLY SILTY, FETID,							
			CONTAINS ≤2% PY GENERALLY, LOCALLY							
			SEMI-MASSIVE BANDS TO 1/4" WIDE; MINOR							
			CALCITE STRINGERS; NUMEROUS QUARTZ VEINLETS							
			OF VARIABLE ORIENTATION							
			SANDSTONE - VARIES FR ARGILLICEOUS SILTSTONE							
			TO MEDIUM GRAINED SANDSTONE; CONTAINS	DDH R-8-3	88	93	5.0'	1	.5	67
			SOME MINOR QUARTZ VEINLETS; TRACE	DDH R8-4	98	103	5.0'	2	.4	37
			PY - UP TO 2% PY ALONG SOME FRACTURES.							
			BEDDING HAS BEEN OFFSET ALONG SOME							
			FRACTURES; THICKNESS OF BEDS RANGES FROM							
			1/8" TO 5'. SANDSTONE IS IMMATURE, DERIVED							
			FROM VOLCANICS; SOME CHLORITIZATION ALONG							
			FRACTURES.							
			100-101.5': ABUNDANT QUARTZ VEINGING IN							
			AN ARGILLITE BED.							
123.5	125.5	100%	VOLCANIC BRECCIA: FINE GRAINED, CHLORITIZED							
			MATRIX, CONTAINS CLASTS OF ARGILLITE +							
			ALTERED SANDSTONE. A FEW QUARTZ VEINLETS							
			PRESENT, LOCALLY ABUNDANT CALCITE							
125.5	131.5	98%	INTERBEDDED BLACK ARGILLITE + SANDSTONE							

NEVILLE CROSBY INC.
TELEPHONE USE-4343

DIAMOND DRILL RECORD

PROPERTY RABBITT

HOLE No. DDH R-8

DIP TEST		
	Angle	
Footage	Reading	Corrected

Hole No. DDH R8 Sheet No. 4 Lat.

Section Dep.

Date Begun Bearing

Date Finished Elev. Collar.

Date Logged Dec. 2

Total Depth 167'

Logged By G.N.

Claim

Core Size BDGM

DEPTH FROM	DEPTH TO	RECOVERY	DESCRIPTION 1' = 30.5 cm	SAMPLE No	FROM	TO	WIDTH OF SAMPLE	Au ppb	Ag ppm	Cu ppm
			AS ABOVE; ARGILLITE PREDOMINATES.							
131.5	136.	100%	INTERBEDDED BLACK ARGILLITE/VOLCANIC BRECCIA							
			ROCK UNITS AS DESCRIBED ABOVE, PY IN							
			ARGILLITE ~3%; BASAL CONTACT @ 27° TO C/A							
			135.5-137': QUARTZ FLOODED ZONE; COARSELY	DDH R8-6	135.5	137	1.5'	5	.2	78
			DISSEMINATED PY ~2%.							
136	167	98%	AUGITE PORPHYRY OR TUFF; ≤10% AUGITE							
			PHENOCRYSTS; ROCK HAS BEEN SLIGHTLY							
			CHLORITIZED; MINOR TO MODERATE QUARTZ-							
			CARBONATE VEINING; TRACE PYRITE							
			156-156.3: WHITE QUARTZ VEIN.							
167	—		END OF HOLE.							

NEVILLE CROSBY INC.
TELEPHONE USE-4343

DIAMOND DRILL RECORD

PROPERTY RABBITT

HOLE No. DDH-R-9

DIP TEST		
	Angle	
Footage	Reading	Corrected

Hole No. R-9 Sheet No. 1
Section
Date Begun 5 NOV, 86
Date Finished 6 NOV, 86
Date Logged Dec 3/86

Lat.
Dep.
Bearing 114°, -46°
Elev. Collar 1433.8m

Total Depth 100' (30.5m)
Logged By B.A.
Claim GAIL GOLD
Core Size BOGM

DEPTH FROM	DEPTH TO	RECOVERY	DESCRIPTION 1' = 30.5 cm	SAMPLE No.	FROM	TO	WIDTH OF SAMPLE	Au ppb	Ag ppm	Cu ppm
0'	52'	95%	ANDESITIC BRECCIA. APHANITIC TO MEDIUM GRAINED							
			MATRIX W/ ANGULAR TO SUBROUNDED CLASTS UP	R-9-1	17'	20'	3'	13	.3	121
			TO 5 CM IN DIAMETER. MINOR EPIDOTE CRYSTALS							
			WITHIN THE MATRIX.							
			MINOR QUARTZ-CARBONATE MOSTLY ALONG FRACTURE							
			PLANS (SOME SLICKENSIDE FEATURES APPARENT ON							
			SEVERAL QUARTZ FILLING). FRACTURES AT 45°-80°							
			TO CA W/ HEMATITE AND CHLORITE STAININGS.							
			MINOR LIMONITE STAININGS.							
			PRESENCE OF SMALL PORPHYRITIC TUFF ZONES (UP							
			TO 30 CM WIDE) WITHIN THE UNIT. NO VISIBLE							
			SULPHIDES - UNIT IS GRADING TO PORPHYRITIC							
			TUFF TOWARDS THE BOTTOM.							
			28'-31' INCREASE IN SILICE CONTENT W/ QUARTZ	R-9-2	28'	31'	3'	6	.1	31
			VEINLET SUBPARALLEL TO CA. (APPROX. 5 CM							
			LONG)							
			49'-52' INCREASE IN HEMATITE STAINING CONTENT	R-9-3	49'	52'	3'	3	.1	108
52'	100'		ANDESITIC TUFF. APHANITIC TO FINE GRAINED							
			MATRIX W/ NUMEROUS SUBROUNDED CLASTS							
			UP TO 8 MM IN DIAMETER							

DIAMOND DRILL RECORD

PROPERTY RABBITT

HOLE No. DDH-R-9

DIP TEST		
	Angle	
Footage	Reading	Corrected

Hole No. R-9 Sheet No. 2

Section

Date Begun

Date Finished

Date Logged Dec. 3/86

Lat.

Dep.

Bearing

Elev. Collar

Total Depth 100' (30.5m)

Logged By B.A.

Claim

Core Size

DEPTH FROM	DEPTH TO	RECOVERY	DESCRIPTION 1' = 30.5 cm	SAMPLE No.	FROM	TO	WIDTH OF SAMPLE	Au ppb	Ag ppm	Cu ppm
			SMALL ZONES (APPROX. 30 TO 50 CM WIDE) OF							
			ANDESITIC BRECCIA -							
			HEMATITE AND LIMONITE STAININGS ALONG FRACTURE							
			PLANS. ~~[illegible]~~ PERVASIVE CHLORITE ALTERATION							
			77'-80' BRECCIATED ZONE w/ QUARTZ VEINLETS	R-9-4	77'	80'	3'	4	.1	112
			UP TO 7 CM WIDE. INCREASE IN SILICE CONTENT							
			AND HEMATITE STAININGS. NO VISIBLE SULPHIDE							
			MINERALIZATION WITHIN THE QUARTZ VEINLETS.							
			89'-93.5' SILICIFIED BRECCIATED ZONE. NO	R-9-5	89'	93.5'	4.5'	41	.6	199
			VISIBLE MINERALIZATION. INCREASE OF QUARTZ							
			STRINGERS CONTENT.							
			FRACTURES AT 45° TO SUBPARALLEL TO C.A							
			w/ HEMATITE AND LIMONITE STAININGS. QUARTZ							
			PRESENT MOSTLY AS FRACTURE FILLING.							
			E.O.H = 100'							
			w/ = WITH							
			C.A = CORE AXIS							

NEVILLE CROSBY INC.
TELEPHONE USE-4343

DIAMOND DRILL RECORD

PROPERTY RABBITT

HOLE No. DDH R-10

DIP TEST		
	Angle	
Footage	Reading	Corrected

Hole No. DDH-R-10 Sheet No. 1 Lat.

Section Dep.

Date Begun 6 NOV, 86 Bearing 262.5, -44°

Date Finished 7 NOV, 86 Elev. Collar 1446.1 m.

Date Logged DEC. 1

Total Depth 127' (38.7m)

Logged By C.N.

Claim GALL GOLD

Core Size BDGM

DEPTH FROM	DEPTH TO	RECOVERY	DESCRIPTION 1' = 30.5 cm	SAMPLE No.	FROM	TO	WIDTH OF SAMPLE	Au ppb	Ag ppm	Cu ppm
0	9.4	37%	ANDESITIC TUFF – GENERALLY FINE GRAINED – SOME LARGER AUGITE + FELDSPAR CRYSTALS; MINOR CHLORITIZATION; MINOR QUARTZ – CARBONATE STRINGERS, QUARTZ IS WHITE TO TRANSLUCENT; MINOR LIMONITE ALONG FRACTURES; TRACE PY.							
9.4	99	100%	BLEACHED VOLCANICS – APHANITIC, SILICEOUS MINOR QUARTZ STRINGER, 1/2" OF INTENSE LIMONITE ALTERATION AT TOP OF INTERVAL. ≤1% PY	DDH R10-1	94	99	0.5'	32	.2	50
99	27	95%	ANDESITE TUFF – AS ABOVE, CORE BLOCKY WITH Fe OXIDES ALONG FRACTURES. 18.5: 1 1/2" ZONE OF QUARTZ – LIMONITE – PY – BLEACHED VOLCANICS 25.6: 1" QUARTZ – CARBONATE VEIN. ROCK BECOMES FINER GRAINED AND SLIGHTLY BLEACHED							
27	31.1	97%	BLEACHED VOLCANICS – AS ABOVE; SLIGHTLY MORE CLAY ALTERATION, ≤2% PY, WEAK TO MODERATE LIMONITE STAIN ALONG FRACTURES WITH SOME QUARTZ VEINLETS.	DDH R10-2	27	31.1	4.1'	37	.1	103

DIAMOND DRILL RECORD

PROPERTY RABBITT

HOLE No. DDH R10

DIP TEST		
	Angle	
Footage	Reading	Corrected

Hole No. DDH R10 Sheet No. 2

Section

Date Begun

Date Finished

Date Logged DEC. 1

Lat.

Dep.

Bearing

Elev. Collar

Total Depth

Logged By C.N

Claim

Core Size BDGM

DEPTH FROM	DEPTH TO	RECOVERY	DESCRIPTION 1'=30.5cm	SAMPLE No.	FROM	TO	WIDTH OF SAMPLE	Au ppb	Ag ppm	Cu ppm
31.1	32.3	100%	ANDESITE TUFF? - AS ABOVE - LACKS FELDSPAR CRYSTALS.							
32.3	32.8	100%	BLEACHED VOLCANICS - AS ABOVE - TOP CONTACT MARKED BY QUARTZ VEINLET @ 45° TO C/A. - BOTTOM CONTACT GRADATIONAL.							
32.8	33.2	100%	ANDESITE TUFF - AS ABOVE.							
33.2	33.5	100%	BLEACHED VOLCANICS - AS ABOVE							
33.5	45.5	98%	ANDESITE TUFF - AS ABOVE							
			38.6 - 39.5: CHLORITE/CLAY ALTERATION OF TUFF IN VICINITY OF QUARTZ ZONE; QUARTZ IS WHITE AND TRANSLUSCENT.	DDH R10-3	38	40	2.0'	1	.1	70
			40 - 45.5: ROCK IS SLIGHTLY ALTERED/BLEACHED - MATRIX IS PALE GREEN-GRAY RATHER THAN THE USUAL DARK GREEN.							
45.5	47.6	95%	FELDSPAR PORPHYRY: DARK GREEN CHLORITIC MATRIX, 20% - 50% FELDSPAR CRYSTALS ≤ 1/4" - IRREGULAR CONTACTS							
47.6	56.6	100%	ANDESITIC TUFF - AS ABOVE; AUGITE CRYSTALS COMMON - MATRIX BECOMES FINER GRAINED DOWNHOLE							

NEVILLE CROSBY INC.
TELEPHONE USE-4343

DIAMOND DRILL RECORD

PROPERTY RABBITT

HOLE No. DDH R10

DIP TEST		
	Angle	
Footage	Reading	Corrected

Hole No. DDH - R10 Sheet No. 3 Lat. Total Depth 127'

Section Dep. Logged By C N

Date Begun Bearing Claim

Date Finished Elev. Collar Core Size BDGM

Date Logged Dec. 1.

DEPTH FROM	DEPTH TO	RECOVERY	DESCRIPTION 1' = 30.5 cm	SAMPLE No.	FROM	TO	WIDTH OF SAMPLE				
56.6	63.5	97%	VOLCANIC BRECCIA - MATRIX IS PORPHYRITIC								
			(FELDSPAR); ≤20% CLASTS, CHLORITE								
			ALTERATION; TRACE CALCITE, MINOR QUARTZ								
			STRINGERS; MINOR AMOUNT OF Fe OXIDES								
			ON FRACTURE SURFACES								
63.5	65.5	100%	ANDESITIC TUFF: AS ABOVE: 20% AUGITE								
			CRYSTALS.								
65.5	71.6	100%	VOLCANIC BRECCIA AS ABOVE								
			66.5-66.5: DYKE? OF COARSE GRAINED FELDSPAR								
			PORPHYRY; PHENOCRYSTS ≤ 1/4"								
71.6	72.4	100%	ANDESITIC TUFF AS ABOVE								
72.4	82.5	97%	VOLCANIC BRECCIA - AS ABOVE								
			81': Small Shear Zone; STRONG CHLORITE								
			ALTERATION, GOUGE.								
82.5	86	90%	CHLORITIZED VOLCANICS - THE VOLCANIC								
			BRECCIA GRADES INTO A FINE GRAINED,								
			CHLORITE ALTERED TUFF?, MINOR CALCITE								
			PRESENT, SOME QUARTZ VEINLETS AND								
			STRINGERS								
			83 1/2 - 86: CORE VERY PEBBLY + GROUND								
86	87.2	100%	FELDSPAR PORPHYRY - FELDSPAR PHENOCRYSTS								

NEVILLE CROSBY INC.
TELEPHONE USE-4343

DIAMOND DRILL RECORD

PROPERTY RABBITT

HOLE No. DDH K10

DIP TEST		
	Angle	
Footage	Reading	Corrected

Hole No. DDH K10 Sheet No 4
Section
Date Begun
Date Finished
Date Logged DEC 1

Lat.
Dep.
Bearing
Elev. Collar

Total Depth
Logged By S.N
Claim
Core Size BDGM

DEPTH FROM	DEPTH TO	RECOVERY	DESCRIPTION 1' = 30.5 cm	SAMPLE No.	FROM	TO	WIDTH OF SAMPLE	Au ppb	Ag ppm	Cu ppm
			ANG ANGULAR TO SUB ROUNDED, 35% PHENOCRYSTS,							
			GROUNDMASS SLIGHTLY CHLORITIZED TRACE							
			QUARTZ-CARBONATE STRINGER							
87.2	99.5	100%	ANDESITE - FINE GRAINED, GENERALLY MASSIVE							
			- MAYBE A FINE GRAINED TUFF; HEMATITE							
			STAIN ON FRACTURE SURFACES							
			97.9 - 98.5: MINOR WHITE & TRANSLUSCENT QUARTZ	DDH K10-4	97.9	101.5	36'	1	.1	97
			VEINING @ 45° TO C/A. CHLORITE + EPIDOTE							
			ALTERATION IN VICINITY.							
99.5	101	98%	VOLCANIC BRECCIA - DARK GREEN ANGULAR TO							
			ROUNDED CLASTS IN A LIGHT GREEN MATRIX							
			- SLIGHT EPIDOTE ALTERATION							
101	109	90%	ANDESITE: AS ABOVE							
			101 - 101.5: QUARTZ-CHLORITE-EPIDOTE ALTERATION							
			108 - 109: CORE PEBBLY, SOME GOUGE PRESENT.							
109	115.5	100%	FELDSPAR PORPHYRY - AS ABOVE							
115.5	121.5	98%	ANDESITE: AS ABOVE							
			117.2 - 117.4 - DYKE? OF QUARTZ PORPHYRY, MATRIX							
			CHLORITIZED							
121.5	127	95%	FELDSPAR PORPHYRY. AS ABOVE; HEMATITE							
			AND CHLORITE ON FRACTURES.							

DIAMOND DRILL RECORD

PROPERTY RABBIT

HOLE No. DDH R10

DIP TEST		
	Angle	
Footage	Reading	Corrected

Hole No. DDH R10 Sheet No. 5

Section

Date Begun

Date Finished

Date Logged Dec. 1

Lat.

Dep.

Bearing

Elev. Collar

Total Depth 127

Logged By CN

Claim

Core Size BDGM

DEPTH FROM	DEPTH TO	RECOVERY	DESCRIPTION 1' = 30.5cm	SAMPLE No.	FROM	TO	WIDTH OF SAMPLE				
			126' - MINOR GOUGE PRESENT								
127	–		END OF HOLE								

NEVILLE CROSBY INC.
TELEPHONE USE-4343

DIAMOND DRILL RECORD

PROPERTY RABBIT

HOLE No. DDH R-11

DIP TEST		
	Angle	
Footage	Reading	Corrected

Hole No. DDH R-11 Sheet No. 1 Lat.

Section Dep.

Date Begun 20 NOV, 86 Bearing 218°, -44°

Date Finished 21 NOV, 86 Elev. Collar 1446.1 m

Date Logged DEC 1, 86

Total Depth 177' (54m)

Logged By C.N.

Claim GILL GOLD

Core Size BDGM

DEPTH FROM	DEPTH TO	RECOVERY	DESCRIPTION 1' = 30.5 cm	SAMPLE No.	FROM	TO	WIDTH OF SAMPLE	Au ppb	As ppm	Cu ppm
0	7.7'	5%	UNCONSOLIDATED, BLOCKY ANDESITE.							
7.7	14.7'	99%	BLEACHED VOLCANICS - ROCK IS NEARLY APHANITIC	DDH R11-1	7.7	10.5	2.8'	51	.1	47
			SILICIFIED, HAS UNDERGONE CLAY ALTERATION,	DDH R11-2	10.5	14.7	4.2'	9	.1	62
			IS WEAKLY CALCAREOUS; ≤ 1/2% FINELY DISSEM.							
			PY.; WEAK LIMONITIC/CARBONATE ALTERATION							
			(DUE TO ANKERITE?) THROUGHOUT - USUALLY ON							
			FRACTURES; ~2% QUARTZ STRINGERS							
			9.7-8.5 : INTENSE LIMONITICALLY ALTERED							
			ZONE.							
			12-12.3 : INTENSE LIMONITICALLY ALTERED ZONE							
			12.8-14.7 : ALTERATION IS LESS INTENSE AND							
			SPORADIC.							
14.7	25.2	100%	ANDESITIC TUFF - FINE TO MODERATELY GRAINED;							
			ANGULAR TO ROUNDED CRYSTALS OF AUGITE PRESENT.							
			MINOR QUARTZ STRINGERS PRESENT, GRADATIONAL							
			CONTACT WITH BLEACHED VOLCANIC UNITS - FINE GRAINED							
			AND SOMEWHAT CHLORITIC.							
25.2	26.9	100%	BLEACHED VOLCANIC - AS ABOVE	DDH R11-3	25.2	26.9	1.7'	31	.1	59
			STRONG LIMONITE ALTERATION PRESENT;							
			BASAL 'CONTACT' @ 52° TO C/A; QUARTZ							
			VEINLETS TO 1/4" WIDE; TWO AGES OF QUARTZ							

NEVILLE CROSBY INC.
TELEPHONE USE-4343

DIAMOND DRILL RECORD

PROPERTY RABBITT

HOLE No. DDH R-11

DIP TEST		
	Angle	
Footage	Reading	Corrected

Hole No. DDH R-11 Sheet No. 2 Lat. Total Depth 177'

Section Dep. Logged By C. N.

Date Begun Bearing Claim

Date Finished Elev. Collar Core Size

Date Logged DEC. 1

DEPTH FROM	DEPTH TO	RECOVERY	DESCRIPTION 1' = 30.5 cm	SAMPLE No	FROM	TO	WIDTH OF SAMPLE	Au ppb	Ag ppm	Cu ppm
26.9	28.6	100%	ANDESITIC TUFF? - GENERALLY FINE GRAINED;							
			CHLORITE ALTERATION; MINOR SLICKENSIDES;							
			TRACE QUARTZ VEINING							
28.6	29.6	100%	BLEACHED VOLCANICS - AS ABOVE							
			- QUARTZ VEINLETS TO 1/4" WITH ASSOCIATED	DDH R11-4	28.6	29.6	1.0'	22	.3	93
			LIMONITE; GRADATIONAL CONTACTS.							
29.6	38.8	98%	ANDESITIC TUFF — AS INITIALLY DESCRIBED							
			- SOMEWHAT LESS AUGITE, MORE FELDSPAR							
			32 - 33.1; MINOR QUARTZ + LIMONITE STAINED ZONE	DDH R11-5	32.0	33.1	1.1'	6	.3	59
38.8	39.8	100%	BLEACHED VOLCANICS - AS ABOVE	DDH R11-6	38.8	39.8	1.0'	21	.1	56
39.8	48.3	100%	INTERMIXED BLEACHED VOLCANICS AND TUFF;							
			BASIC UNIT IS THE ANDESITIC TUFF DESCRIBED							
			ABOVE WHICH CONTAINS A NUMBER OF QUARTZ							
			STRINGERS. THE STRINGERS HAVE BLEACHED							
			THE SURROUNDING TUFF.							
			47.3': 1 1/2" QUARTZ VEIN WITH ASSOCIATED	DDH R11-7	46.8	47.3	0.5'	7	.3	62
			LIMONITE AND MINOR CALCITE							
48.3	55.5	100%	BLEACHED VOLCANICS - SIMILAR TO THAT ABOVE	DDH R11-8	48.3	51	2.7'	15	.4	76
			- STRONGER CLAY ALTERATION; ~10% QUARTZ	DDH R11-9	51	55.5	4.5'	22	.2	80
			VEINS + STRINGERS, ~1% PY; QTZ WHITE → TRANS-							
			LUSCENT.							

NEVILLE CROSBY INC.
TELEPHONE USE-4343

DIAMOND DRILL RECORD

PROPERTY RABBITT

HOLE No. DDH R 11

DIP TEST		
	Angle	
Footage	Reading	Corrected

Hole No. DDH R 11 Sheet No. 3 Lat. Total Depth 177'
Section Dep. Logged By C. N.
Date Begun Bearing Claim
Date Finished Elev. Collar. Core Size.
Date Logged DEC 1

DEPTH FROM	DEPTH TO	RECOVERY	DESCRIPTION 1'=30.5cm	SAMPLE No.	FROM	TO	WIDTH OF SAMPLE	Au ppb	Ag ppm	Cu ppm
			52.8 : SMALL SHEAR ZONE							
			54.3 – 55.5 : ALTERATION FADES INTO REL-							
			ATIVELY FRESH ROCK							
55.5	57.0	100%	ANDESITIC FLOW BRECCIA → AGGLOMERATE;							
			CLASTS ARE SUBANGULAR TO ROUNDED, –							
			UP TO 1½" LONG; MINOR QUARTZ STRINGERS;							
			SOME LIMONITE ON FRACTURE SURFACES;							
			CHLORITIC ALTERATION.							
57.0	59.8	97%	BLEACHED VOLCANICS – AS INITIALLY DESCRIBED	DDH R11-10	57.0	59.8	2.8'	1	.3	55
			59.3 : INTENSE LIMONITE ALTERATION							
59.8	143	75%	ANDESITIC FLOW BRECCIA → AGGLOMERATE							
			SAME AS ABOVE							
			LIMONITE & HEMATITE STAINS ALONG FRACTURES							
			FRACTURES & QZ STRINGERS @ 35° - 45° to C.A.							
			MINOR SULPHIDE OXYDES ALONG QZ							
			MINOR SLICKENSIDE FEATURES ON QZ IN FRACTURES							
			69' 5cm QZ VEIN @ 45° to CA							
			81' - 83' INCREASE IN HEMATITE ALTERATION	R11-11	81'	83'	2'	1	.2	140
			98' - 142' EXTREMELY SCATTERED AND BROKEN							
			INCREASE OF CLAY ALTERATION	R 11-12	98'	101'	3'	3	.1	89
			MINOR QZ STRINGERS, USUALLY ALONG	R 11-13	133'	143'	10'	1	.1	104

DIAMOND DRILL RECORD

PROPERTY _____ HOLE No. R-

DIP TEST		
	Angle	
Footage	Reading	Corrected

Hole No. R-11 Sheet No. 4 Lat. _____ Total Depth 177

Section _____ Dep. _____ Logged By _____

Date Begun _____ Bearing _____ Claim _____

Date Finished _____ Elev. Collar _____ Core Size _____

Date Logged _____

DEPTH FROM	DEPTH TO	RECOVERY	DESCRIPTION 1'=30.5 cm	SAMPLE No.	FROM	TO	WIDTH OF SAMPLE	Au ppb	Ag ppm	Cu ppm
			FRACTURES, PARTLY VUGGY - NO MINERALIZATION							
			RECOVERY ~ 50%							
143	145	100%	ANDESITIC FLOW MORE SILICIFIED	DDH R11-14	143	145	2.0'	1	.2	68
			INCREASE OF QZ STRINGERS							
			MINOR FINE DISEMINATED PYRITE							
			SLIGHTLY SHEARED							
145	177	95%	ANDESITE - APHANITIC TO CATACLASTIC	DDH R11-15	173	176	3.0'	3	.1	69
			TEXTURE, MODERATE CHLORITE ALTERATION;							
			TRACE QUARTZ STRINGERS, MINOR HEMATITE							
			STAIN ON FRACTURE SURFACES; TRACE PY;							
			150: SMALL AMOUNT FAULT GOUGE							
			156-157: INCREASED AMOUNT OF CLAY ALTERATION							
			167: STRONG CHLORITE ALTERATION							
			CORE IS LARGELY BLOCKY - IN PLACES							
			COMPLETELY BROKEN UP.							
177	-		END OF HOLE							

NEVILLE CROSBY INC.
TELEPHONE USE-4343

DIAMOND DRILL RECORD

PROPERTY RABBITT

HOLE No. DDH R-12

DIP TEST		
	Angle	
Footage	Reading	Corrected

Hole No. DDH R-12 Sheet No. 1
Section
Date Begun 25 Nov / 86
Date Finished 27 Nov / 86
Date Logged Nov. 30 / 86

Lat.
Dep.
Bearing 107, -46°
Elev. Collar 1199.1 m

Total Depth 284' (86.6m)
Logged By C.N.
Claim GALL GOLD
Core Size BDGM

DEPTH FROM	DEPTH TO	RECOVERY	DESCRIPTION 1' = 30.5 cm	SAMPLE No.	FROM	TO	WIDTH OF SAMPLE	Au ppb	Ag ppm	Cu ppm
0	21.8	17%	BLOCKY, PEBBLY UNCONSOLIDATED VOLCANICS -							
			FINE GRAINED MASSIVE THROUGH FELDSPAR							
			PORPHYRY TO FELDSPAR FLOWER PORPHYRY							
21.8	139	95%	BLACK ARGILLITE - LOCALLY GRAPHITIC,	DDH R12-1	22	27.5'	5.5'	3	.3	39
			FETID; LOCALLY INTERBEDDED WITH GRAY ARG.	DDH R12-2	48	53'	5.0'			
			SILTSTONE +/OR FINE GRAINED SANDSTONE;	DDH R12-3	63	68'	5.0'	1	.3	49
			ARGILLITE CONTAINS PERVASIVE QUARTZ	DDH R12-4	88	93'	5.0'	1	.3	54
			VEINLETS AND STRINGERS TO 0.5 INCHES WIDE	DDH R12-5	108	113'	5.0'	1	.3	50
			TRACE TO MODERATE AMOUNTS OF CALCITE	DDH R12-6	113'	118'	5.0'	1	.3	54
			IN THE SEDIMENTS AND ASSOCIATED WITH THE							
			QUARTZ. QUARTZ TENDS TO BE MASSIVE, WHITE							
			LOCALLY TRANSLUSCENT; PYRITE IS PERVASIVE							
			THROUGHOUT THE ARGILLITE - OCCURS AS							
			FINE TO COARSE GRAINED CRYSTALS IN							
			FINE TO COARSE DISSEMINATIONS. - ALSO							
			OCCURS AS FRACTURE INFILLING AND WITH							
			THE QUARTZ. OVERALL PYRITE CONTENT							
			~2%; BEDDING ~47° TO C/A.							
			22-27.5': ARGILLITE IS LIMONITE STAINED							
			81-82': STRONGLY GRAPHITIC							
			89': 3" QUARTZ ZONE - BRECCIATING ARGILLITE							

DIAMOND DRILL RECORD

PROPERTY RABBITT

HOLE No. DDH R-12

DIP TEST		
	Angle	
Footage	Reading	Corrected

Hole No. DDH R-12 Sheet No. 2 Lat.

Section Dep.

Date Begun Bearing

Date Finished Elev Collar.

Date Logged Nov 30

Total Depth

Logged By C. N.

Claim

Core Size

DEPTH FROM	DEPTH TO	RECOVERY	DESCRIPTION 1'=30.5 cm	SAMPLE No.	FROM	TO	WIDTH OF SAMPLE	Au ppb	Ag ppm	Cu ppm
139'	144.5'	100%	ALTERED VOLCANIC – QUARTZ-CHLORITE-CLAY-PYRITE ALTERATION; ROCK IS HIGHLY SILICIFIED, PYRITE IS FINE GRAINED, MASSIVE TO DISSEMINATED, PYRITE CONTENT IS 20% LOCALLY (141-142.5'), ~6% OVERALL; MINOR CALCITE PRESENT, ASSOCIATED WITH QUARTZ	DDH R12-7	139'	142'	3.0'	1	.3	75
				DDH R12-8	142'	144.5'	2.5'	1	.1	62
144.5'	149.8	90%	BLACK ARGILLITE – AS ABOVE; 147 - BLOCKY, GROUND CORE							
149.8	154.3	97%	ANDESITE – FINE GRAINED, SILICEOUS, CHLORITIC 1% PYRITE OVERALL, PYRITE CONCENTRATED ALONG FRACTURES 152': 1" QUARTZ-CARBONATE VEIN, TREND 90° TO C/A.							
154.3	166'	95%	BLACK ARGILLITE – AS ABOVE 165' - BLOCKY, PEBBLY GROUND CORE	DDH R12-9	156'	161'	5.0'	1	.3	52
166'	169'	65%	ALTERED VOLCANIC – STRONGLY ALTERED TO CLAYS → CHLORITE, SOME QUARTZ-CARBONATE VEINING – LARGEST VEIN 2"; <1% FINE GRAINED, COARSELY DISSEMINATED PYRITE; CORE VERY BROKEN UP.	DDH R12-10	166'	169'	3.0'	2	.1	74
169'	190.5	98%	BLACK ARGILLITE – AS ABOVE	DDH R12-11	178	183'	5.0'	42	.1	2

DIAMOND DRILL RECORD

PROPERTY PABBITT

HOLE No. DDH R-12

DIP TEST		
	Angle	
Footage	Reading	Corrected

Hole No. DDH R-12 Sheet No. 3
Section
Date Begun
Date Finished
Date Logged Nov. 30

Lat.
Dep.
Bearing
Elev. Collar

Total Depth
Logged By C N
Claim
Core Size

DEPTH FROM	DEPTH TO	RECOVERY	DESCRIPTION 1' = 30.5 cm	SAMPLE No.	FROM	TO	WIDTH OF SAMPLE	Au ppb	Ag ppm	Cu ppm
			169-169.5': BLOCKY, GROUND CORE							
190.5	194'	95%	ALTERED VOLCANICS - ALTERATION CONSISTS OF	DDH R12-12	190.5	194'	3.5'	4	.4	68
			SOME SILICIFICATION AND MODERATE CLAY							
			ALTERATION, MINOR CALCITE; A FEW QUARTZ -							
			CARBONATE STRINGERS + VEINLETS WITH AS-							
			SOCIATED PYRITE PRESENT, UPPER CONTACT							
			47° TO C/A; LOWER CONTACT 40° TO C/A							
194	245.3'	95%	BLACK ARGILLITE - AS ABOVE	DDH R12-13	219	224'	5.0'	2	.3	53
			BEDDING 45-58° TO C/A.	DDH R12-14	228.5	233.5	5.0'	1	.3	58
			202: BLOCKY, GROUND CORE							
			226-227.5: SHEAR ZONE (?) - ROCK INCOMPE-							
			TENT.							
			224: SMALL QUARTZ-GRAPHITE ZONE							
			NOTE: GRAPHITE MORE ABUNDANT - GIVES RISE TO							
			SOME SLICKENSIDE SURFACES.							
245.3	245.9'	100%	ALTERED VOLCANIC - STRONG CLAY ALTERATION	DDH R12-15	245.3	245.9	0.6'	1	.3	83
			+ SILICIFICATION; SMALL QUANTITIES OF PERVASIVE							
			CALCITE IN UNIT, NUMEROUS STRINGERS + VEINLETS							
			OF QUARTZ-CARBONATE, ≤1% PYRITE. TOP							
			CONTACT IS 30° TO C/A; BASAL CONTACT 43° TO							
			C/A.							

NEVILLE CROSBY INC.
TELEPHONE USE-4343

DIAMOND DRILL RECORD

PROPERTY Rabbitt

HOLE No. DDH R-12

DIP TEST		
	Angle	
Footage	Reading	Corrected

Hole No. DDH R12 Sheet No. 4 Lat. Total Depth

Section Dep. Logged By C N

Date Begun Bearing Claim

Date Finished Elev. Collar Core Size

Date Logged Nov. 30

DEPTH FROM	DEPTH TO	RECOVERY	DESCRIPTION 1'=30.5cm	SAMPLE No	FROM	TO	WIDTH OF SAMPLE	Au ppb	Ag ppm	Cu ppm
245.9	246.4	100%	BLACK ARGILLITE - AS ABOVE							
			ABUNDANT WHITE QUARTZ AT TOP AND							
			BASE OF UNIT.							
246.4	249.	100%	ALTERED VOLCANIC - AS ABOVE, ABUNDANT	DDH R12-16	246.4	249	2.6'	1	.1	59
			QUARTZ STRINGERS (≤20%) IN TOP 6";							
			AMOUNT OF QUARTZ + STRENGTH OF ALTER-							
			ATION BELOW 249.5'; TOP CONTACT 37° TO							
			C/A.; BASAL CONTACT 25° TO C/A							
249	249.5	100%	BLACK ARGILLITE - AS INITIALLY DESCRIBED							
			~1% PYRITE							
249.5	252.7	100%	ALTERED VOLCANICS - AS ABOVE; ~5%							
			QUARTZ STRINGERS; ~2% PYRITE, TOP CONTACT	DDH R12-17	249.5	252.7	3.2'	1	.3	55
			@ 30° TO C/A							
252.7		98%	BLACK ARGILLITE - AS ABOVE; TOP CONTACT	DDH R12-18	252.7	255.4	2.7'	1	.1	40
			HAS BEEN GROUND OUT; BEDDING @							
			45 TO C/A.							
			END OF HOLE.							

NEVILLE CROSBY INC.
TELEPHONE USE-4343

DIAMOND DRILL RECORD

PROPERTY RABBITT

HOLE No. DDH R-13

DIP TEST		
	Angle	
Footage	Reading	Corrected

Hole No. DDH R-13 Sheet No. 1
Section
Date Begun NOV 27
Date Finished DEC 3
Date Logged DEC 5

Lat.
Dep.
Bearing 107, -60°
Elev. Collar 1199.1 m

Total Depth 350' (106.7m)
Logged By C N
Claim GAIL GOLD
Core Size BDGM

DEPTH FROM	DEPTH TO	RECOVERY	DESCRIPTION 1' = 30.5 cm	SAMPLE No.	FROM	TO	WIDTH OF SAMPLE
0	20.8	28%	FELDSPAR PORPHYRY TO FELDSPAR FLOWER				
			PORPHYRY: CORE BLOCKY + PEBBLY; APHANITIC				
			MATRIX; TRACE QUARTZ STRINGERS; MINOR				
			FE OXIDES ON FRACTURES				
20.8	148.5	95%	BLACK ARGILLITE: SLIGHTLY FETID;				
			BEDDING @ 35° TO C/A; CONTAINS NUMEROUS				
			WHITE QUARTZ STRINGERS + VEINLETS, VEINS				
			OCCASIONAL; GENERALLY WEAKLY GRAPHITIC				
			- LOCALLY STRONGLY GRAPHITIC; CONTAINS				
			INTERBEDS OF ARGILLACEOUS SILTSTONE, SILTY ARG-				
			ILLITE, + FINE GRAINED GREYWACKE? +/OR TUFF				
			UP TO ONE FOOT WIDE; MINOR CALCITE				
			ASSOCIATED WITH SOME QUARTZ VEINS AND				
			LOCALLY IN THE SEDIMENTS. PYRITE IS				
			UBIQUITOUS - OCCURS AS BLEBS IN QUARTZ,				
			AS FRACTURE INFILLINGS + AS FINE TO				
			COARSE DISSEMINATIONS IN SEDIMENTS (PRI-				
			MARILY ARGILLITE); RARE BANDS ≈ 1/2" WIDE				
			OF SEMI MASSIVE PYRITE; ≈ 3% PYRITE OVER-				
			ALL; ≥ 2 AGES OF QUARTZ; SOME OFFSET OF				
			QUARTZ VEINLETS ALONG FRACTURES.				

DIAMOND DRILL RECORD

PROPERTY RABBITT

HOLE No. DDH R-13

DIP TEST		
	Angle	
Footage	Reading	Corrected

Hole No. DDH R-13 Sheet No. 2
Section
Date Begun Nov. 27
Date Finished DEC. 3
Date Logged DEC. 5

Lat.
Dep.
Bearing
Elev. Collar

Total Depth 350'
Logged By C.N.
Claim
Core Size BDGM.

DEPTH FROM	DEPTH TO	RECOVERY	DESCRIPTION 1' = 30.5 cm	SAMPLE No.	FROM	TO	WIDTH OF SAMPLE	Au ppb	Ag ppm	Cu ppm
			20.8-23': CORE BLOCKY, LIMONITE STAINED ALONG	DDH R13-1	20.8	23.5	2.7'	1	.6	55
			FRACTURES;							
			43': 1" WIDE QUARTZ VEIN @ 12° TO C/A,	DDH R13-2	42.0	44.5	2.5'	1	.5	43.
			BRECCIATING ARGILLITE, 10% PYRITE							
			44': SMALL GRAPHITIC SHEAR							
			60.5-61': CONTAINS CLASTS OF ARGILLITE							
			IN A TUFFACEOUS SILTSTONE							
			66-66.5: ABUNDANT QUARTZ VEINING	DDH R13-3	65.0	67.0	3.0'	1	.5	56
			86.7': SHEAR ZONE - ~1½' OF CORE MISSING	DDH R13-4	83.7	88.0	4.3'	1	.4	43
148.5	152.7	100%	ANDESITE TUFF FINE GRAINED, SILICEOUS;	DDH R13-5	148.5	152.3	3.8'	1	.5	59
			TRACE CALCITE; MINOR QUARTZ VEINING; ~15%							
			CLASTS OF ARGILLITE; ~3% COARSELY							
			DISSEMINATED PYRITE; UPPER CONTACT @ 55° TO							
			C/A; LOWER CONTACT @ 45° TO C/A							
152.7	154.7	100%	BLACK ARGILLITE: AS ABOVE							
			LOWER CONTACT (L.C.) @ 50° TO C/A							
154.7	156.6	100%	ANDESITE TUFF: AS ABOVE; ~3% ARGILLITE	DDH R13-6	154.7	156.6	1.9'	1	.4	55
			CLASTS; LOWER 1½' OF INTERVAL IS A QUARTZ							
			FLOODED ZONE CAUSING BRECCIATION;							
			L.C. @ ≈ 50° TO C/A.							
156.6	157.8	100%	BLACK ARGILLITE: AS ABOVE; L.C. @ 75° TO C/A.							

NEVILLE CROSBY INC.
TELEPHONE USE-4343

DIAMOND DRILL RECORD

PROPERTY RABBITT

HOLE No. DDH R-13

DIP TEST		
	Angle	
Footage	Reading	Corrected

Hole No. DDH R-13 Sheet No. 3
Section
Date Begun NOV 27
Date Finished DEC 3
Date Logged DEC 5

Lat.
Dep.
Bearing
Elev. Collar

Total Depth 350'
Logged By C.N.
Claim
Core Size BDGM

DEPTH FROM	DEPTH TO	RECOVERY	DESCRIPTION 1'=30.5 cm	SAMPLE No.	FROM	TO	WIDTH OF SAMPLE	Au ppb	Ag ppm	Cu ppm
157.8	162.5	100%	ANDESITE: WEAK TO MODERATE CHLORITE + CLAY							
			ALTERATION; MINOR WHITE QUARTZ VEINING WITH							
			TRACE CALCITE; TRACE TO 1% PYRITE -							
			CONCENTRATED ON FRACTURE SURFACES, L.C. @							
			45° TO C/A.							
162.5	180.4	98%	BLACK ARGILLITE: AS ABOVE; L.C. @ 28° TO							
			C/A							
180.4	182.2	100%	ANDESITE: L.C. @ 45° TO C/A - AS ABOVE							
			180.6 - 181': BLACK ARGILLITE BED.							
182.2	184.2	100%	BLACK ARGILLITE: AS ABOVE; L.C. @ 54° TO	DDH R13-18	182.2	184.2	2.0'	2	.3	62
			C/A							
			181.8 - 182: WHITE QUARTZ VEIN @ 68° TO C/A.							
			CONTAINS COARSE BLEBS OF FINE GRAINED PYRITE							
184.2	191.6	100%	ANDESITE: AS ABOVE	DDH R13-19	187.5	191.6	4.1'	1	.1	22
			188': STRONG CLAY ALTERATION + SILICIFICATION							
			189.3 - 191.6: MOTTLED GRAY-WHITE AND WHITE QUARTZ-							
			CARBONATE VEIN; TRACE ARGILLITE CLASTS - 10%							
			AT TOP 2' OF INTERVAL.							
191.6	196.1	98%	BLACK ARGILLITE - AS ABOVE							
196.1	199.4	100%	ANDESITE - AS ABOVE.							
199.4	199.7	95%	BLACK ARGILLITE: AS ABOVE							

DIAMOND DRILL RECORD

PROPERTY RABBITT

HOLE No. DDH R-13

DIP TEST		
	Angle	
Footage	Reading	Corrected

Hole No. DDH R13 Sheet No. 4 Lat.

Section Dep.

Date Begun Nov. 27 Bearing

Date Finished DEC. 3 Elev. Collar

Date Logged DEC. 5

Total Depth 350'

Logged By C N.

Claim

Core Size BDGM

DEPTH FROM	DEPTH TO	RECOVERY	DESCRIPTION 1' = 30.5 cm	SAMPLE No.	FROM	TO	WIDTH OF SAMPLE	Au ppb	Ag ppm	Cu ppm
199.7	200.9	95%	ANDESITE : AS ABOVE ; ABUNDANT QUARTZ VEINING							
			+ SOME ARGILLITE CLASTS IN TOP .3'							
200.9	214	95%	BLACK ARGILLITE : AS ABOVE ; L.C. @ 22° TO C/A							
			200.9 - 203.4 : CORE PEBBLY.							
			205 - 206.8 CORE BLOCKY, STRONGLY GRAPHITIC.							
214	227.10	90%	ANDESITE : AS ABOVE ; L.C. @ 90° TO C/A							
			223 - 225.2 : CLAY ALTERATION SLIGHTLY MORE							
			PRONOUNCED ; CORE VERY BLOCKY + PEBBLY.							
227.10	277.2	95%	BLACK ARGILLITE : AS ABOVE ; MODERATE TO							
			STRONG GRAPHITE ; L.C. @ 28° TO C/A ; BEDDING							
			@ 45° TO C/A							
			251 - 277.2 : PYRITE CONTENT ≤ 5%							
277.2	277.9	100%	ALTERED VOLCANIC : ADVANITIC ; SILICIFIED ; CLAY	DDH R13-20	277.2	277.9	0.7'	1	.3	62
			ALTERATION : A FEW SLICKENSIDE SURFACES ; MINOR							
			CHLORITE + GRAPHITE ALONG FRACTURES, STRONG							
			QUARTZ VEINING ; TRACE TO MODERATE AMOUNTS							
			OF CALCITE IN MATRIX ; ≤ 1% PYRITE - PRIMARILY							
			ALONG FRACTURES ; L.C. @ 55° TO C/A.							
277.9	282.7	98%	INTERBEDDED BLACK ARGILLITE + ALTERED VOLCANICS	DDH R13-21	277.9	279.4	1.5'	.1	.4	54
			ARGILLITE : STRONGLY GRAPHITIC ; OCCURS PRIMARILY	DDH R13-22	279.4	282.7	3.3'	1	.4	69
			IN TOP 1½' OF INTERVAL.							

NEVILLE CROSBY INC.
TELEPHONE USE-4343

DIAMOND DRILL RECORD

PROPERTY RABBITT

HOLE No. DDH R-13

DIP TEST		
	Angle	
Footage	Reading	Corrected

Hole No. DDH R-13 Sheet No. 5
Section
Date Begun NOV. 27
Date Finished DEC. 3
Date Logged DEC. 5.

Lat.
Dep.
Bearing
Elev. Collar

Total Depth 350'
Logged By C.N.
Claim
Core Size BQGM.

DEPTH FROM	DEPTH TO	RECOVERY	DESCRIPTION 1' = 30.5 cm	SAMPLE No.	FROM	TO	WIDTH OF SAMPLE	Au ppb	Ag ppm	Cu ppm
			279.4 - 282.7 ALTERED VOLCANICS; AS ABOVE;							
			ALTERATION WEAKENS DOWNHOLE; STRONG CLAY							
			ALTERATION WITH 5% ARGILLITE CLASTS AT TOP							
			OF INTERVAL							
			280.9 : 1" WIDE QUARTZ FLOODED ZONE WHICH							
			CONTAINS CLASTS OF ARGILLITE + ALTERED VOLCANICS							
282.7	299.7	90%	BLACK ARGILLITE : AS ABOVE	DDH R13-7	299.2	302	2.8'	2	.5	53
299.7	304.2	96%	INTERBEDDED BLACK ARGILLITE + ALTERED VOLCANICS;	DDH R13-8	302	303.5	1.5'	1	.3	10
			ROCK TYPES AS ABOVE.	DDH R13-9	303.5	304.8	1.3'	1	.3	44
			302 - 303.5 : QUARTZ BRECCIA ZONE : CLASTS OF							
			ARGILLITE (≈1%) + BRUNNISH QUARTZ IN A							
			WHITE QUARTZ MATRIX; MINOR VOLCANIC							
			MATERIAL PRESENT; SMALL SHEAR IN MIDDLE							
			OF ZONE.							
304.2	304.8	97%	BLACK ARGILLITE : AS ABOVE; L.C. @ 45° TO C/A							
304.8	305.6	100%	ALTERED VOLCANIC : AS ABOVE; L.C. @ 40° TO C/A.	DDH R13-10	304.8	306.6	1.8'	1	.3	47
305.8	306.4	100%	BLACK ARGILLITE : AS ABOVE; L.C. @ 32° TO C/A							
306.4	306.8	100%	ALTERED VOLCANIC : AS ABOVE; L.C. @ 25° TO C/A	DDH R13-11	306.6	309	2.4'	1	.3	34
306.8	316	95%	BLACK ARGILLITE : AS ABOVE.							
316	322.3	75%	ALTERED VOLCANIC : AS ABOVE	DDH R13-12	316.5	320.5	4.0'	1	.2	57
322.3	325.2	95%	BLACK ARGILLITE : AS ABOVE.	DDH R13-13	321.6	325	3.4'	1	.3	57

DIAMOND DRILL RECORD

PROPERTY RABBITT.

HOLE No. DDH R-13

DIP TEST		
	Angle	
Footage	Reading	Corrected

Hole No. DDH R13- Sheet No. 6 Lat.

Section Dep.

Date Begun Nov 27 Bearing

Date Finished DEC. 3 Elev. Collar.

Date Logged DEC 5

Total Depth 350'

Logged By C.N.

Claim

Core Size BDGM

DEPTH FROM	DEPTH TO	RECOVERY	DESCRIPTION 1' = 30.5 cm	SAMPLE No.	FROM	TO	WIDTH OF SAMPLE	Au ppb	As ppm	Cu ppm
325.2	328.3	90%	ALTERED VOLCANIC : AS ABOVE; STRONG CLAY	DDH R13-14	325	328.3	3.3'	2	.2	13
			ALTERATION, SHEARED FROM 325.0'							
			327.5 - 327.8 : MINOR BLACK ARGILLITE - COMPLETELY							
			BROKEN UP.							
328.3	330.6	90%	BLACK ARGILLITE : AS ABOVE; VERY GRAPHITIC	DDH R13-15	328	330.6	2.6'	1	.4	49
			CORE BLOCKY.							
330.6	331.6	90%	ALTERED VOLCANIC : AS ABOVE; CORE VERY							
			BLOCKY.							
331.6	332.6	90%	BLACK ARGILLITE : AS ABOVE.							
332.6	335.8	90%	ALTERED VOLCANIC : AS ABOVE	DDH R13-16	332.6	335.8	3.2'	1	.4	151
			333.5 - 333.6 : EXTREMELY CLAY ALTERED; IN-							
			COMPETENT; ADJACENT TO SHEAR ZONE.							
333.6	335.8	50%	BLACK ARGILLITE : AS ABOVE; 333.6 - 334.7							
			MISSING DUE TO SHEARING; VERY GRAPHITIC.							
			L.C. @ 40° TO C/A.							
335.8	350	98%	ALTERED VOLCANIC : SIMILAR TO ABOVE;	DDH R13-17	335.8	341.5	5.7'	1	.2	65
			LOCALLY MORE CHLORITE RATHER THAN CLAY							
			ALTERATION.							
			335.8 - 341.5 : ABUNDANT WHITE QUARTZ VEINS							
			341.5 - 342.5 : STRONG CLAY ALTERATION, SEMI-COMPE-							
			TENT; SOME ARGILLITE CLASTS PRESENT.							

NEVILLE CROSBY INC.
TELEPHONE USE-4343

DIAMOND DRILL RECORD

PROPERTY RABBITT

HOLE No. DDH R14

DIP TEST		
	Angle	
Footage	Reading	Corrected

Hole No. DDH R14 Sheet No. 1
Section
Date Begun DEC 6
Date Finished DEC 8
Date Logged DEC 8

Lat.
Dep.
Bearing 245°, -45°
Elev. Collar 1313 m
DIP -45°

Total Depth 274' (83.5m)
Logged By C. N.
Claim GALL GOLD
Core Size BDGM.

DEPTH FROM	DEPTH TO	RECOVERY	DESCRIPTION 1'=30.5 cm	SAMPLE No.	FROM	TO	WIDTH OF SAMPLE	Au ppb	Ag ppm	Cu ppm
0	119	96%	FELDSPAR FLOWER PORPHYRY: MATRIX APHANITIC	DDH R14-1	28.5	32.5	5.0'	1	.2	171
			TO MEDIUM GRAINED, CHLORITIZED; PHENOCRYSTS	DDH R14-2	110.2	113.2	3.0'	89	.3	162
			TO 3/4"; MINOR QUARTZ-CARBONATE VEINING;	DDH R14-3	113.2	119.	5.8'	6	.2	146
			~15% PHENOCRYSTS; ~1% PYRITE - DISSEMINATED;							
			LOWER CONTACT (L.C.) @ 35° TO C/A; CORE							
			BLOCKY WITH ABUNDANT FE OXIDES ALONG							
			FRACTURES.							
			28.5-37.5: NON PORPHYRITIC INTERVAL							
			29.5-29: QUARTZ FLOODED ZONE							
			29-30.6: HIGHLY BROKEN & FRACTURED CORE							
			30.2-32.5': MODERATE QUARTZ-CARBONATE-LIM-							
			ONITE VEINING; VOLCANICS SLIGHTLY BLEACHED							
			IN IMMEDIATE VICINITY.							
			107.4-119: TRACE AMOUNT OF PHENOCRYSTS							
			110.2-112: MODERATE QUARTZ VEINING; STRONG							
			LIMONITE ALTERATION; SOME BLEACHING +							
			SILICIFICATION ~~CHLORITIZATION~~ OF THE SURROUNDING CORE.							
			115.7-118.5: CORE PEBBLY; CHLORITIZED.							
119	139.5	97%	BLACK ARGILLITE: WEAK TO MODERATE QUARTZ							
			STRINGERS + VEINLETS; LOCALLY CALCAREOUS;							
			WEAK TO MODERATE GRAPHITE; 2-3% PYRITE							

DIAMOND DRILL RECORD

PROPERTY RABBITT

HOLE No. DDH R14

DIP TEST		
	Angle	
Footage	Reading	Corrected

Hole No. DDH R14 Sheet No. 2
Section
Date Begun DEC 6
Date Finished DEC 8
Date Logged DEC 8

Lat.
Dep.
Bearing 245°
Elev. Collar
DIP -45°

Total Depth 274'
Logged By C N
Claim
Core Size BQGM

DEPTH FROM	DEPTH TO	RECOVERY	DESCRIPTION 1' = 30.5 cm	SAMPLE No.	FROM	TO	WIDTH OF SAMPLE
			OVERALL, USUALLY OCCURRING IN LENSES OR ALONG				
			FRACTURES/BEDDING, ALSO AS DISSEMINATIONS;				
			THIN INTERBEDS OF SILTY ARGILLITE & ARGIL-				
			LACEOUS SILTSTONE - FREQUENTLY CALCAREOUS.				
			L.C. @ 30° TO C/A.				
			120-122: CORE PEBBLY				
139.5	159.3	100%	FELDSPAR FLOWER PORPHYRY: AS ABOVE				
159.3	166	100%	ANDESITE TUFF: FINE GRAINED - LOCALLY				
			MEDIUM TO COARSE, THIN (<2") INTERBEDS OF				
			ARGILLITE; BEDDING @ 67° TO C/A; CALCITE				
			COATINGS ON FRACTURES; TRACE PYRITE; MINOR				
			QUARTZ VEINLETS + STRINGERS; WEAK TO MODER-				
			ATE CHLORITIZATION; L.C. @ 37° TO C/A				
			165.3-166: BRECCIATED ZONE				
166	167.4	100%	BLACK ARGILLITE: AS ABOVE; BEDDING @				
			47° TO C/A; L.C. @ 52° TO C/A.				
167.4	167.7	100%	ANDESITE TUFF: AS ABOVE; L.C. @ 27° TO C/A				
167.7	168.3	100%	BLACK ARGILLITE: AS ABOVE; GRADATIONAL				
			CONTACT.				
168.3	190.6	96%	ANDESITE TUFF: AS ABOVE; TRACE SMALL				
			ARGILLITE FRAGMENTS; L.C. @ 47° TO C/A.				

NEVILLE CROSBY INC.
TELEPHONE USE-4343

DIAMOND DRILL RECORD

PROPERTY RABBITT. HOLE No. DDH R14

DIP TEST		
	Angle	
Footage	Reading	Corrected

Hole No. DDH R14 Sheet No. 3 Lat. Total Depth 294'
Section Dep. Logged By C.N.
Date Begun DEC 6 Bearing 245° Claim
Date Finished DEC 8 Elev. Collar. Core Size BDGM.
Date Logged DEC 8 DIP -45°

DEPTH FROM	DEPTH TO	RECOVERY	DESCRIPTION 1' = 30.5 cm	SAMPLE No.	FROM	TO	WIDTH OF SAMPLE	Au ppb	Ag ppm	Cu ppm
			181.6-181.7: CLAY ALTERATION PRESENT.							
			190-190.8: STRONG CLAY ALTERATION - SHEARED	DDH R14-4	190	190.8	0.8'	1	.1	62
190.6	190.8	100%	BLACK ARGILLITE: AS ABOVE, L.C @ 45° TO C/A							
190.8	198.5	75%	ANDESITE TUFF: AS ABOVE BUT STRONGLY							
			CHLORITE ALTERED WITH MINOR CLAY + CALCITE							
			LOCALLY BRECCIATED; L.C @ 45° TO C/A.							
198.5	200.8	95%	BLACK ARGILLITE: AS ABOVE	DDH R14-5	198.5	200.3	2.3'	17	.1	28
			200.5-200.8: ZONE OF QUARTZ VEIN FLOODING-							
			WHITE + TRANSLUCENT QUARTZ							
200.8	201.8	100%	ANDESITE TUFF: AS ABOVE; L.C @ 42° TO C/A.	DDH R14-6	200.3	201.8	1.0'	1	.2	169
			200.8-201.5: STRONG CLAY ALTERATION + SILICIFICA-							
			TION; 2% PYRITE							
201.8	202.4	100%	INTERBEDDED GRAPHITIC BLACK ARGILLITE +							
			ANDESITE TUFF; L.C @ 43° TO C/A							
202.4	228	100%	FELDSPAR FLOWER PORPHYRY: AS ABOVE							
			202.4-203: MODERATE TO STRONG CHLORITE +							
			CLAY ALTERATION; PHENOCRYSTS ABSENT.							
			227.5-228: TRACE PHENOCRYSTS; GRADATIONAL							
			CONTACT.							
228	237.5	100%	VOLCANIC BRECCIA: CLASTS CAUSED BY PYRO-	DDH R14-7	235.3	237.5	2.2'	2	.3	169
			CLASTIC FLOW + BY BRECCIATION DUE TO QUARTZ							

NEVILLE CROSBY INC.
TELEPHONE USE-4343

DIAMOND DRILL RECORD

PROPERTY RABBITT

HOLE No. DDH R14

DIP TEST		
	Angle	
Footage	Reading	Corrected

Hole No. DDH R14 Sheet No. 4

Section

Date Begun DEC. 6

Date Finished DEC. 8

Date Logged DEC. 8

Lat.

Dep.

Bearing 245°

Elev. Collar

DIP -45°

Total Depth 274'

Logged By C.N.

Claim

Core Size BDGM

DEPTH FROM	DEPTH TO	RECOVERY	DESCRIPTION 1' = 30.5 cm	SAMPLE No.	FROM	TO	WIDTH OF SAMPLE	Au ppb	Ag ppm	Cu ppm
			STRINGER NETWORKS; CLASTS MATRIX SUP-							
			PORTED; SLIGHT CHLORITE + CLAY ALTERATION;							
			TRACE CALCITE; L.C. @ 45° TO C/A.							
			239 - 239.5' SILICIFIED; 5% PYRITE IN COARSE							
			DISSEMINATIONS + BLEBS + ON FRACTURE SURFACES							
237.5	239	100%	INTERBEDDED BLACK ARGILLITE + SILTSTONE: AS	DDH R14-8	237.5	239	1.5'	2	.2	44
			ABOVE; L.C. @ 20° TO C/A; ARGILLITE CON-							
			TAINS ABUNDANT WHITE QUARTZ VEINS; BEDDING							
			@ 40° TO C/A.							
239	254.5	64%	FELDSPAR FLOWER PORPHYRY: AS ABOVE; L.C. @ 55°	DDH R14-9	239	241	2.0'	3	.2	211
			TO C/A.							
			239 - 250.9' ROCK IS AN NON DESCRIPT GRAY-							
			GREEN COLOR; PHENOCRYSTS RARE + DIFFICULT							
			TO SEE; CHLORITE + CLAY ALTERATION.							
254.5	255.9	100%	BLACK ARGILLITE: AS ABOVE; L.C. @ 52° TO C/A	DDH R14-10	254.5	255.9	1.4'	2	.2	69
			CONTAINS ~25% QUARTZ.							
255.9	274	100%	TUFF: FINE TO MEDIUM GRAINED; GREENISH (CHLORITIZED)							
			TO GRAY COLORING; FELSIC; <1/2% PYRITE COARSELY DIS-							
			SEMINATED; CONTAINS TRACE AMOUNTS OF PYRITIFEROUS							
			HORNFELS ARGILLITE, RARE WHITE QUARTZ VEINING.							
274	—		END OF HOLE.							

NEVILLE CROSBY INC.
TELEPHONE USE-4343

DIAMOND DRILL RECORD

PROPERTY RABBITT. HOLE No. DDH R15

DIP TEST		
	Angle	
Footage	Reading	Corrected

Hole No. DDH R15 Sheet No. 1 Lat.
Section Dep.
Date Begun DEC. 11 Bearing 101°, -45°
Date Finished DEC. 12 Elev. Collar 1359.0 m
Date Logged DEC. 12 Dip -45°

Total Depth 160' (48.8m)
Logged By C. N.
Claim GAIL GOLD
Core Size BDGM.

DEPTH FROM	DEPTH TO	RECOVERY	DESCRIPTION 1'=30.5cm	SAMPLE No.	FROM	TO	WIDTH OF SAMPLE	Au ppb	Ag ppm	Cu ppm
0	160	95%	FELDSPAR FLOWER PORPHYRY: PHENOCRYSTS ≤3/4"	DDH R15-1	43.2	46	2.8'	2	.2	180
			~20% PHENOCRYSTS; APHANITIC, DARK GREEN	DDH R15-2	46	50	4.0'	1	.1	57
			MATRIX; TRACE QUARTZ-CARBONATE STRINGERS +	DDH R15-3	52.5	54.5	2.0'	1	.1	142
			VEINLETS; CORE VERY BLOCKY AND STAINED WITH	DDH R15-4	87.5	89.0	1.5'	310	.3	110
			Fe OXIDES NEAR SURFACE - DECREASING WITH	DDH R15-5	99	101.5	2.5'	2	.2	200
			DEPTH.	DDH R15-6	142	143	1.0'	1	.2	111
			43.8-44.7: QUARTZ VEIN; GREENISH GRAY TO							
			GRAY WHITE IN COLOR; CONTAINS CHLORITE +							
			CARBONATE; TRACE LIMONITE; CONTAINS							
			CHLORITIZED VOLCANIC FRAGS							
			45-45.6: QUARTZ VEIN: AS ABOVE; TREND							
			~40° TO C/A.							
			48.7-50.0: QUARTZ VEIN: AS ABOVE; WHITE QUARTZ							
			TREND 25° TO C/A.							
			46-47: QUARTZ VEIN: AS ABOVE.							
			53.1-53.8: MINOR QUARTZ VEINING; HEMATITE							
			ON FRACTURES.							
			88.2-89.0 ALTERED VOLCANIC: NON PORPHYRITIC							
			SILICIFIED; MINOR CLAY ALTERATION; MINOR							
			QUARTZ-CARBONATE ALTERATION							
			99.5-101: MODERATE WHITE QUARTZ VEINING							

DIAMOND DRILL RECORD

PROPERTY RABBITT

HOLE No. DDH R15

DIP TEST		
	Angle	
Footage	Reading	Corrected

Hole No. DDH R15 Sheet No. 2.
Section
Date Begun DEC. 11
Date Finished DEC. 12
Date Logged DEC. 12

Lat.
Dep.
Bearing 101°
Elev. Collar
DIP -45°

Total Depth 160'
Logged By C.N.
Claim
Core Size BDEM.

DEPTH FROM	DEPTH TO	RECOVERY	DESCRIPTION 1' = 30.5 cm	SAMPLE No.	FROM	TO	WIDTH OF SAMPLE
			142.2-143; QUARTZ-CARBONATE VEINING; CONTAINS				
			1" OF RELATIVELY PURE QUARTZ WITH CARBON-				
			ATE; REST OF INTERVAL IS QUARTZ + CALCITE				
			MATRIX CEMENTING BRECCIATED VOLCANICS.				
			149-160: FELDSPAR PHENOCRYSTS BECOMES RARER				
			DOWNHOLE; MINOR AUGITE PHENOCRYSTS PRESENT				
			≤1mm; INCREASE TO 10% BY END OF HOLE.				
160	—		END OF HOLE.				

NEVILLE CROSBY INC.
TELEPHONE USE-4343

DIAMOND DRILL RECORD

PROPERTY RABBITT

HOLE No. DDH R16

DIP TEST		
	Angle	
Footage	Reading	Corrected

Hole No. DDH R16 Sheet No. 1
Section
Date Begun DEC. 14
Date Finished DEC. 15
Date Logged DEC. 17

Lat.
Dep.
Bearing 100°, -45°
Elev. Collar. 1404 m
DIP -45°

Total Depth 335' (102.1m)
Logged By C.N.
Claim GAIL GOLD
Core Size BDGM.

DEPTH FROM	DEPTH TO	RECOVERY	DESCRIPTION 1'=30.5 cm	SAMPLE No.	FROM	TO	WIDTH OF SAMPLE	Au ppb	Ag ppm	Cu ppm
0	34.8	—	OVERBURDEN							
34.8	181.5	95%	BLACK ARGILLITE: WEAK TO MODERATE GRAPHITE;	DDH R16-1	78	80.8	2.8'	3	.2	25
			INTERBEDDED WITH SOME SILTY + SANDY BEDS UP	DDH R16-2	85.1	87.3	2.2'	5	1.2	113
			TO 1 FOOT THICK; BEDDING @ 25° TO 40° TO							
			C/A; LOCALLY ARGILLITE BLEACHED GRAY +							
			HORNFELSED, PYRITE UBIQUITOUS, 5-10%, LIM-							
			ONITE STAINING ON FRACTURE SURFACES; MINOR							
			CALCITE DISSEMINATED THROUGHOUT ARGILLITE;							
			WEAK TO MODERATE QUARTZ VEINLETS THROUGHOUT							
			60.5: 3/4" QUARTZ-CARBONATE VEIN @ 20° TO C/A							
			65.5-80.8: ARGILLACEOUS SILT/SANDSTONE, VOL-							
			CANIC IN ORIGIN (TUFF?); COARSER INTERVALS							
			CONTAIN ≤3% CLASTS OF ARGILLITE.							
181.5	188	98%	CLAY ALTERED ANDESITE TUFF? FINE GRAINED;	DDH R16-3	186	188	2.0'	2	.4	187
			MINOR CALCITE IN MATRIX; MODERATE AMOUNTS							
			OF QUARTZ VEINLETS THROUGHOUT, RARE THIN							
			INTERBEDS OF BLACK ARGILLITE; ≤1% DISSEM-							
			INATED PYRITE; LOCALLY GRAPHITIC; L.C. @							
			45° TO C/A.							
188	197.5	95%	BLACK ARGILLITE: AS ABOVE: STRONGLY GRAPHITIC	DDH R16-4	194.3	197.5	3.2'	3	.1	25
			194.9-196.9: SHEAR ZONE; CORE SEMI-COMPETENT							

NEVILLE CROSBY INC.
TELEPHONE USE-4343

DIAMOND DRILL RECORD

PROPERTY RABBITT

HOLE No. DDH R16

DIP TEST		
	Angle	
Footage	Reading	Corrected

Hole No. DDH R16 Sheet No. 2 Lat. Total Depth 325'

Section Dep. Logged By C. N.

Date Begun DEC. 14 Bearing 100° Claim

Date Finished DEC. 15 Elev. Collar Core Size BQ.M.

Date Logged DEC. 17 DIP -45°

DEPTH FROM	DEPTH TO	RECOVERY	DESCRIPTION 1' = 30.5 cm	SAMPLE No.	FROM	TO	WIDTH OF SAMPLE	Au ppb	Ag ppm	Cu ppm
			MINOR WHITE QUARTZ VEINING + CALCITE.							
197.5	199.2	98%	CLAY ALTERED ANDESITE TUFF?: AS ABOVE; MINOR	DDHR16-5	197.5	199.2	1.7'	4	.2	39
			GRAPHITE; MODERATE CHLORITE ALTERATION; MINOR							
			SLICKENSIDES.							
199.2	262	80%	BLACK ARGILLITE: AS ABOVE	DDHR16-6	200.5	203.5	3.0'	14	.2	30
			229.7-230.6: ANDESITE TUFF? INTERBEDS ≤2"							
			THICK @ 45° TO C/A.							
			257.5-262: SHEAR ZONE: 4' OF CORE MISSING							
262	273.3	100%	ANDESITE: FINE TO MEDIUM GRAINED; CHLORITIZED							
			WITH MINOR SLICKENSIDES; TRACE AMOUNTS OF							
			PLAGIOCLASE PHENOCRYSTS; MINOR WHITE QUARTZ-							
			CARBONATE VEINLETS; L.C. @ 47° TO C/A							
273.3	276.5	100%	BLACK ARGILLITE: AS ABOVE; 2-5% PYRITE;							
			L.C. @ 70° TO C/A.							
276.5	281.6	98%	CLAY ALTERED ANDESITE TUFF: AS ABOVE							
			≤ 3% PYRITE; TRACE GRAPHITE; CHLORITIZED;							
			ARGILLITE BEDS TO 2"							
281.6	290	65%	BLACK ARGILLITE: AS ABOVE							
			287-290: CORE VERY BLOCKY; 2' MISSING							
290	293	96%	FELDSPAR PORPHYRY: ANDESITIC MATRIX;							
			STRONGLY CLAY + CHLORITE ALTERED; PLAGIOCLASE							

NEVILLE CROSBY INC.
TELEPHONE USE-4343

DIAMOND DRILL RECORD

PROPERTY RABBITT

HOLE No. DDH R16

DIP TEST		
	Angle	
Footage	Reading	Corrected

Hole No. DDH R16 Sheet No. 3
Section
Date Begun DEC. 14
Date Finished DEC. 15
Date Logged DEC. 17.

Lat.
Dep.
Bearing 100°
Elev. Collar
DIP -45°

Total Depth 335'
Logged By C N.
Claim
Core Size BDGM

DEPTH FROM	DEPTH TO	RECOVERY	DESCRIPTION 1' = 30.5 cm	SAMPLE No.	FROM	TO	WIDTH OF SAMPLE	Au ppb	Ag ppm	Cu ppm
			PHENOCRYSTS ≤3%; LOCALLY WHITE QUARTZ-CARBONATE VEINLETS; ≤1% DISSEMINATED PYRITE; L.C. @ 53° TO C/A.							
293	296.5	70%	BLACK ARGILLITE: AS ABOVE							
296.5	304	98%	FELDSPAR FLOWER PORPHYRY: SIMILAR TO FELDSPAR PORPHYRY ABOVE; PHENOCRYSTS ≤10%; PHENOCRYSTS TO ½"; MATRIX STRONGLY CHLORITIZED; MINOR QUARTZ-CARBONATE VEINLETS							
304	318	35%	BLACK ARGILLITE: AS ABOVE: FAULT ZONE; ROCK GROUND TO BLACK SAND.	DDH R16-7	304	318	14.0'	1	.4	125
318	323.2	100%	FELDSPAR FLOWER PORPHYRY: AS ABOVE; PHENOCRYSTS ≤5%; L.C. @ 45° TO C/A.							
323.2	335	100%	BLACK ARGILLITE: AS ABOVE	DDH R16-8	323.3	327	2.7'	1	.5	114
			327-327.8: SILICIFIED VOLCANIC ZONE WITH ≤20% PYRITE							
335	—		END OF HOLE.							

NEVILLE CROSBY INC.
TELEPHONE USE-4343

DIAMOND DRILL RECORD

PROPERTY RABBITT. HOLE No. DDH R17

DIP TEST		
	Angle	
Footage	Reading	Corrected

Hole No. DDH R17 Sheet No. 1 Lot.
Section Dep.
Date Begun DEC 16 Bearing 105 , -45
Date Finished DEC 16 Elev. Collar
Date Logged DEC 18 DIP -45°

Total Depth 116 (35.4m)
Logged By C. N.
Claim GAIL GOLD
Core Size EGM.

DEPTH FROM	DEPTH TO	RECOVERY	DESCRIPTION 1'=30.5 cm	SAMPLE No.	FROM	TO	WIDTH OF SAMPLE	Au ppb	Ag ppm	Cu ppm
0	18		OVERBURDEN	DDH R17-1	33.5	42.5	3.0'	1	.1	50
18	49	70%	QUARTZ-FELDSPAR PORPHYRY? STRONGLY CLAY	DDH R17-2	42.5	46	3.5'	1	.1	15
			ALTERED; CORE VERY BLOCKY WITH ABUNDANT	DDH R17-3	46	49	3.0'	4	.1	33.
			LIMONITE ON FRACTURE SURFACES + DISSEMINATED							
			THROUGHOUT; ≤1% DISSEMINATED PYRITE; CORE							
			FREQUENTLY VERY FINE GRAINED, FELSIC - ~INTRUSIVE							
			IN APPEARANCE; MAFICS CHLORITIZED; MINOR							
			VUGGY CAVITIES; LOWER CONTACT (L.C.) @ 40°							
			TO CA:							
			39.6-40.5 BUFF COLORED QUARTZ ZONE; CONTAINS							
			NUMEROUS FRACTURES + CAVITIES WHICH ARE LINED							
			WITH Fe-OXIDES							
			45.5-47 QUARTZ ZONE; GRAY-WHITE COLOR; ~50%							
			QUARTZ; 15% LIMONITE + PYRITE; 5% OTHER							
			IMPURITIES/MAFICS.							
49	49.5	90%	BLACK ARGILLITE: LOOSE PEBBLY FRAGMENTS							
			MINOR LIMONITE STAINING; WEAKLY HORN-							
			FELSED							
49.5	50.5	90%	INTERMEDIATE FLOW BRECCIA OR TUFF: CONTAINS							
			10% ARGILLITE CLASTS ≤ 2MM; ≤1% CAV-							
			ITIES; LIMONITE STAIN ON FRACTURE SURFACES							

NEVILLE CROSBY INC.

DIAMOND DRILL RECORD

PROPERTY RABBIT

HOLE No. DDH R17

DIP TEST		
	Angle	
Footage	Reading	Corrected

Hole No. DDH R17 Sheet No. 2

Section

Date Begun DEC. 16

Date Finished DEC. 16

Date Logged DEC. 18

Lat.

Dep.

Bearing 105°

Elev. Collar

DIP -45°

Total Depth 116'

Logged By C. S.

Claim

Core Size BDGM.

DEPTH FROM	DEPTH TO	RECOVERY	DESCRIPTION 1' = 30.5 cm	SAMPLE No.	FROM	TO	WIDTH OF SAMPLE
			WITH ≤ 2% PYRITE.				
50.5	58.8	100%	BLACK ARGILLITE: TRACE CALCITE DISSEMINATED				
			THROUGHOUT; MINOR QUARTZ STRINGERS, <1% PYRITE				
58.8	60	98%	INTERMEDIATE FLOW BRECCIA OR TUFF: AS ABOVE				
60	99.5	100%	BLACK ARGILLITE: AS ABOVE; PYRITE ≤ 2%;				
			LIMONITE STAIN ON FRACTURES; SILTY INTERBEDS				
			BEDDING @ 15° TO C/A; L.C. @ 30° TO C/A.				
99.5	111.5	100%	VOLCANIC BRECCIA: 30% CLASTS OF ARGILLITE				
			+ AUTOBRECCIATED MATERIAL; CLASTS ROUNDED TO				
			SUBANGULAR; SILICEOUS; L.C. @ 30° TO C/A				
111.5	112.3	100%	ARGILLACEOUS SILTSTONE: VOLCANICALLY DERIVED,				
			SAME AS THAT FOUND INTERBEDDED WITH ARGILLITE				
112.3	116	100%	VOLCANIC BRECCIA: AS ABOVE.				
116			END OF HOLE				

NEVILLE CROSBY INC.
TELEPHONE USE-4343

APPENDIX I B

Diamond Drill Hole Sections

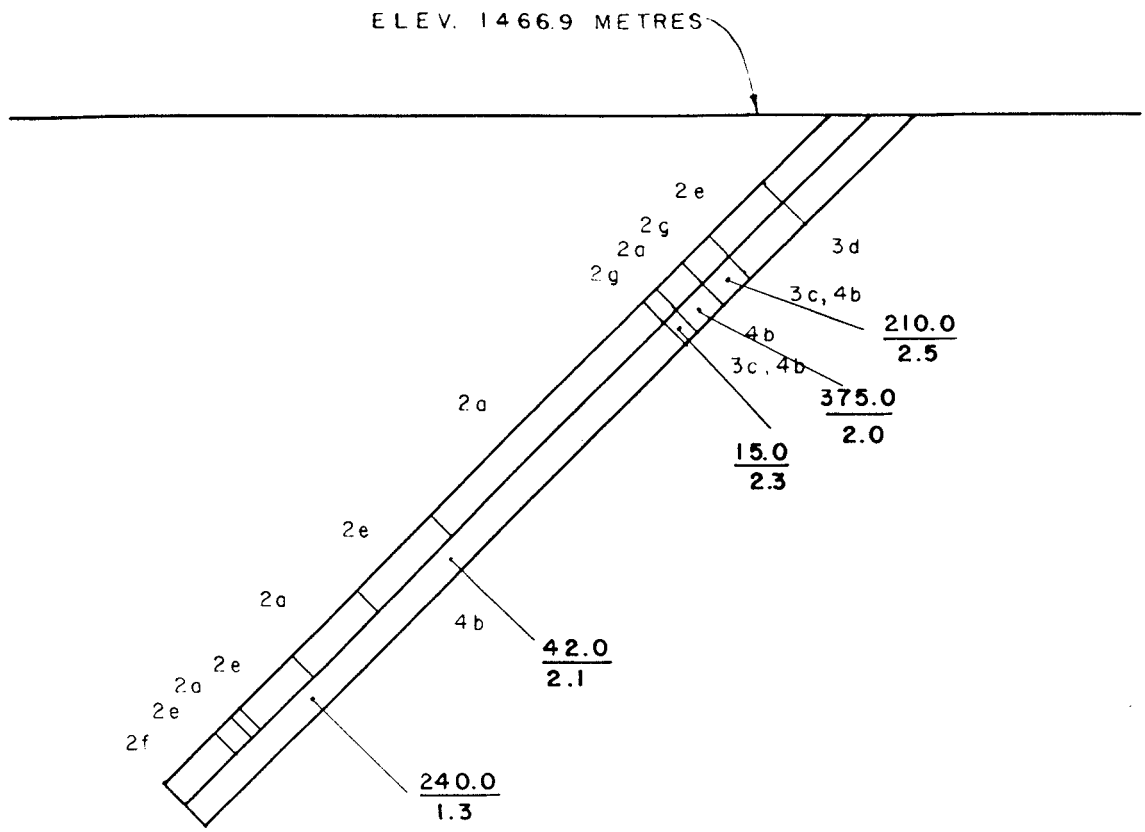

DIP	AZIMUTH	DEPTH
-45	270°	124'

210	Au (ppb)
0.5	Width(ft)

LEGEND

- 1a Black Graphitic Argillite
- 1b Sandstone / Siltstone / Greywacke
- 2a Volcanic Breccia
- 2b Volcanic Tuff
- 2c Volcanic Arenite
- 2d Feldspar Porphyry
- 2e Andesite
- 2f Augite Porphyry
- 2g Undifferentiated Volcanics
- 3a Weak Alteration
- 3b Moderate Alteration
- 3c Strong Alteration
- 3d Sheared, Broken, or Unconsolidated
- 4a Quartz
- 4b Quartz and/or Calcite Stringers

0 10 20 30 40

SCALE - FEET

1 FT = 0.305 m

TWIN EAGLE RESOURCES INC.

GOLD MOUNT CLAIM GROUP
SIMILKAMEEN, M.D., TULAMEEN, B.C.

DDH - R - 1
SECTION LOOKING SOUTH

To accompany a report by: L. Christenson, M. Sc.

Drawn by: S.W.
DATE: FEBRUARY 1987

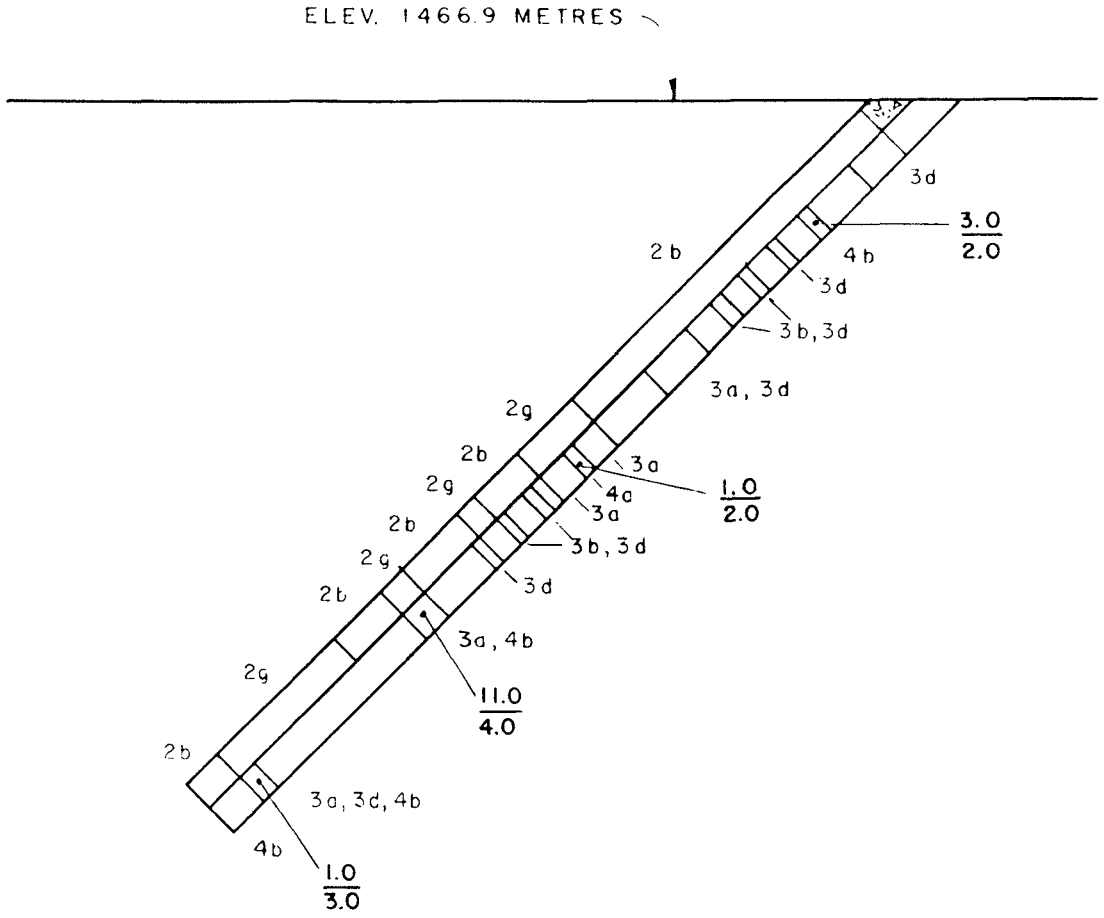

DIP	AZIMUTH	DEPTH
-45°	90°	131'

21.0 / 0.5 — Au (ppb) / Width (ft)

0 10 20 30 40

SCALE - FEET

1 FT = 0.305 m

LEGEND

- 1a Black Graphitic Argillite
- 1b Sandstone / Siltstone / Greywacke
- 2a Volcanic Breccia
- 2b Volcanic Tuff
- 2c Volcanic Arenite
- 2d Feldspar Porphyry
- 2e Andesite
- 2f Augite Porphyry
- 2g Undifferentiated Volcanics
- 3a Weak Alteration
- 3b Moderate Alteration
- 3c Strong Alteration
- 3d Sheared, Broken, or Unconsolidated
- 4a Quartz
- 4b Quartz and/or Calcite Stringers

TWIN EAGLE RESOURCES INC.

GOLD MOUNT CLAIM GROUP
SIMILKAMEEN, M.D., TULAMEEN, B.C.

DDH - R - 2
SECTION LOOKING SOUTH

To accompany a report by: L. Christenson, M. Sc.

Drawn by: S.W.
DATE: FEBRUARY 1987

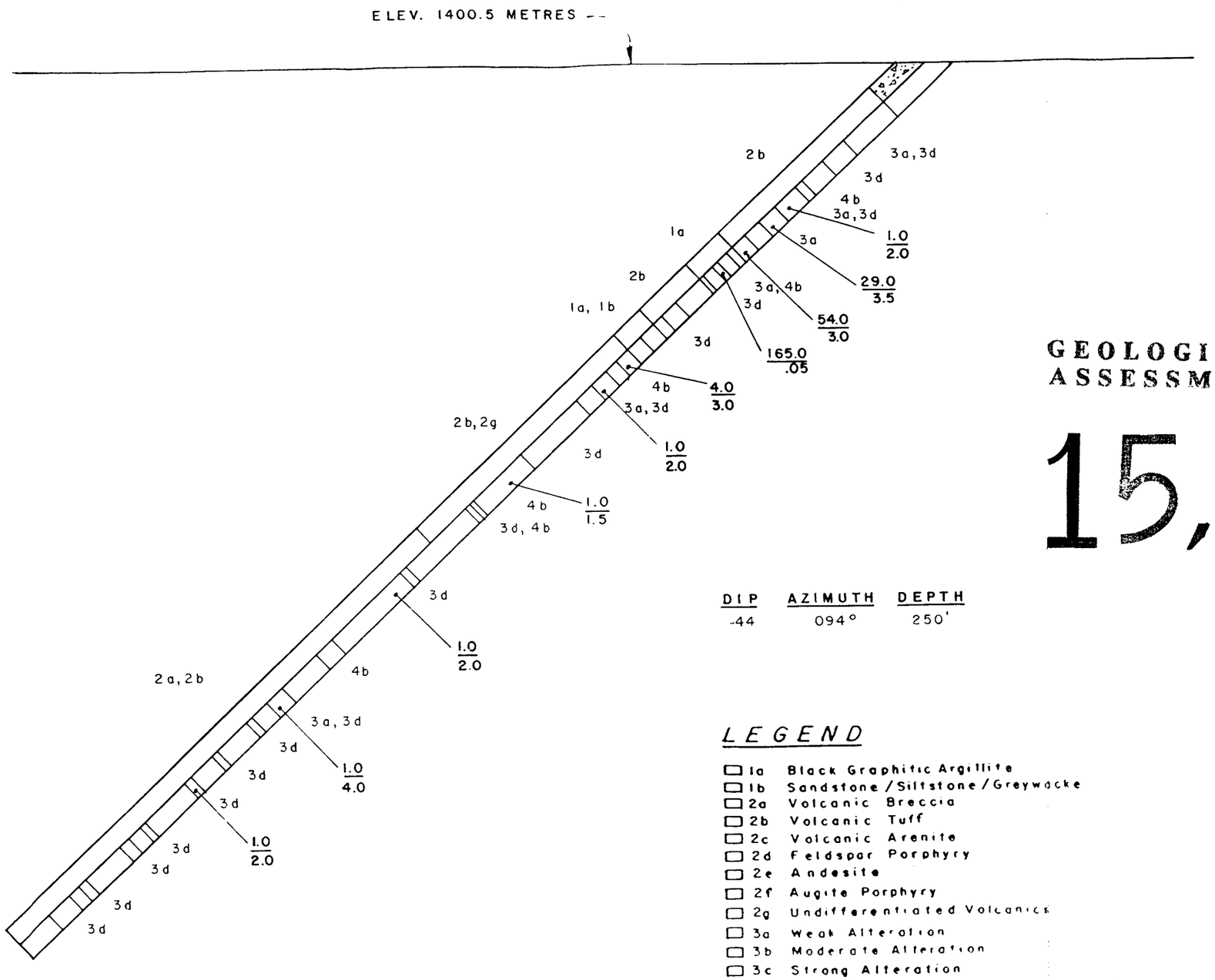

GEOLOGICAL BRANCH
ASSESSMENT REPORT

15,850

DIP	AZIMUTH	DEPTH
-44	094°	250'

21.0 / 0.5 AU (ppb) / Width (ft)

LEGEND

- 1a Black Graphitic Argillite
- 1b Sandstone / Siltstone / Greywacke
- 2a Volcanic Breccia
- 2b Volcanic Tuff
- 2c Volcanic Arenite
- 2d Feldspar Porphyry
- 2e Andesite
- 2f Augite Porphyry
- 2g Undifferentiated Volcanics
- 3a Weak Alteration
- 3b Moderate Alteration
- 3c Strong Alteration
- 3d Sheared, Broken, or Unconsolidated
- 4c Quartz
- 4b Quartz and/or Calcite Stringers

0 10 20 30 40

SCALE - FEET

1 FT = 0.305 m

TWIN EAGLE RESOURCES INC.

GOLD MOUNT CLAIM GROUP
SIMILKAMEEN, M.D., TULAMEEN, B.C.

DDH-R-3
SECTION LOOKING SOUTH

To accompany a report by
L. Christenson, M. Sc.

Drawn by: S.W.
DATE: FEBRUARY 1987

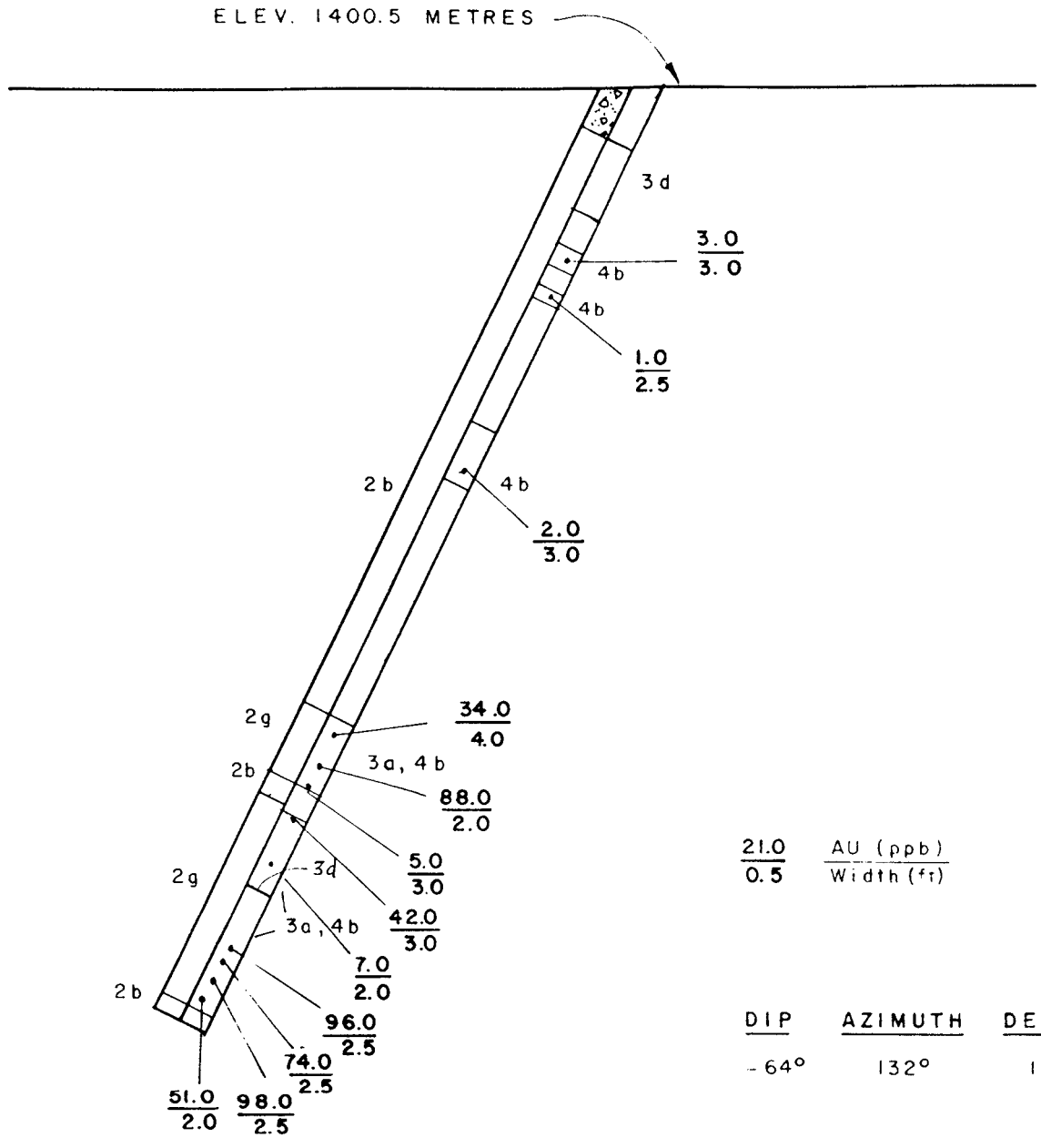

21.0 / 0.5 — AU (ppb) / Width (ft)

DIP	AZIMUTH	DEPTH
-64°	132°	148'

0 10 20 30 40

SCALE - FEET

1 FT = 0.305 m

LEGEND

- 1a Black Graphitic Argillite
- 1b Sandstone / Siltstone / Greywacke
- 2a Volcanic Breccia
- 2b Volcanic Tuff
- 2c Volcanic Arenite
- 2d Feldspar Porphyry
- 2e Andesite
- 2f Augite Porphyry
- 2g Undifferentiated Volcanics
- 3a Weak Alteration
- 3b Moderate Alteration
- 3c Strong Alteration
- 3d Sheared, Broken, or Unconsolidated
- 4a Quartz
- 4b Quartz and/or Calcite Stringers

TWIN EAGLE RESOURCES INC.

GOLD MOUNT CLAIM GROUP
SIMILKAMEEN, M.D., TULAMEEN, B.C.

DDH-R-4
SECTION LOOKING SOUTHWEST

To accompany a report by:
L. Christenson, M. Sc.

Drawn by: S.W.
DATE: FEBRUARY 1987

GEOLOGICAL BRANCH
ASSESSMENT REPORT

15,850

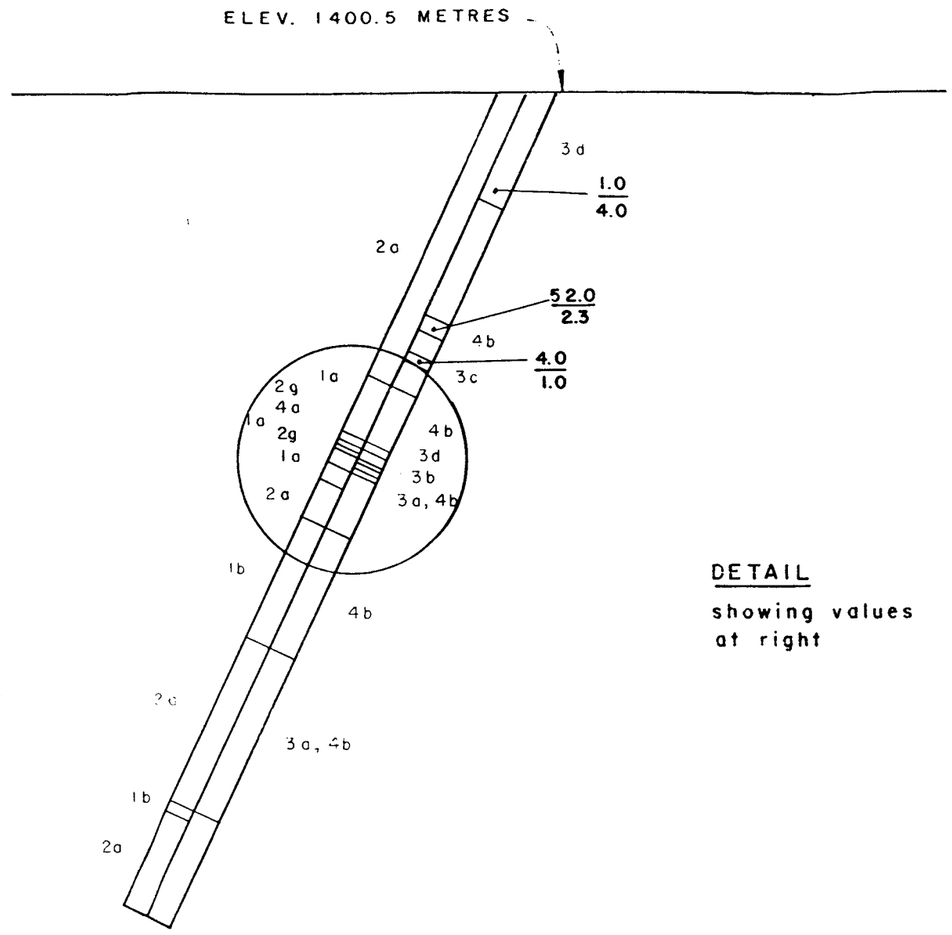

DETAIL

showing values at right

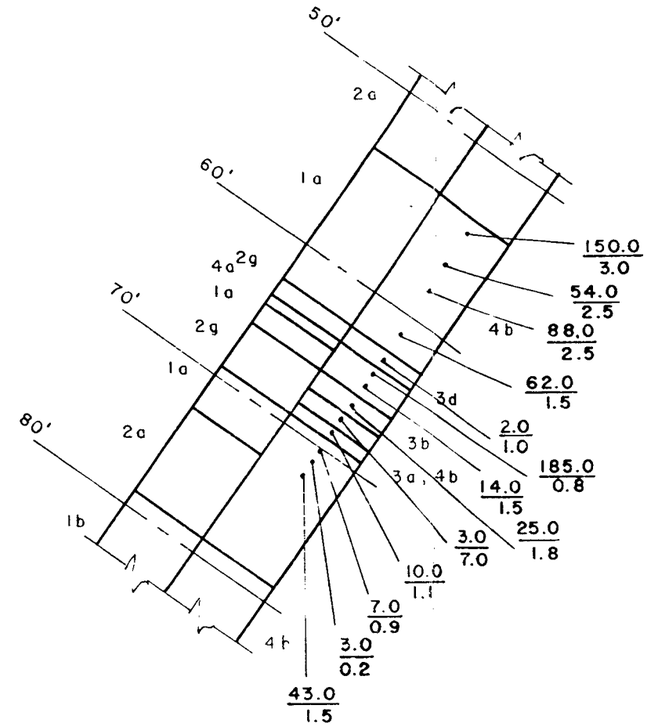

DETAIL

0 5 10 15

SCALE - FEET

1 FT = 0.305 m

DIP	AZIMUTH	DEPTH
-65°	055°	150'

21.0 / 0.5 — AU (ppb) / Width (ft.)

0 10 20 30 40

SCALE - FEET

LEGEND

- 1a Black Graphitic Argillite
- 1b Sandstone / Siltstone / Greywacke
- 2a Volcanic Breccia
- 2b Volcanic Tuff
- 2c Volcanic Arenite
- 2d Feldspar Porphyry
- 2e Andesite
- 2f Augite Porphyry
- 2g Undifferentiated Volcanics
- 3a Weak Alteration
- 3b Moderate Alteration
- 3c Strong Alteration
- 3d Sheared, Broken, or Unconsolidated
- 4a Quartz
- 4b Quartz and/or Calcite Stringers

TWIN EAGLE RESOURCES INC.

GOLD MOUNT CLAIM GROUP
SIMILKAMEEN, M.D., TULAMEEN, B.C.

DDH - R - 5
SECTION LOOKING SOUTHEAST

To accompany a report by:
L. Christenson, M. Sc.

Drawn by: S.W.
DATE: FEBRUARY 1987

GEOLOGICAL BRANCH
ASSESSMENT REPORT

15,850

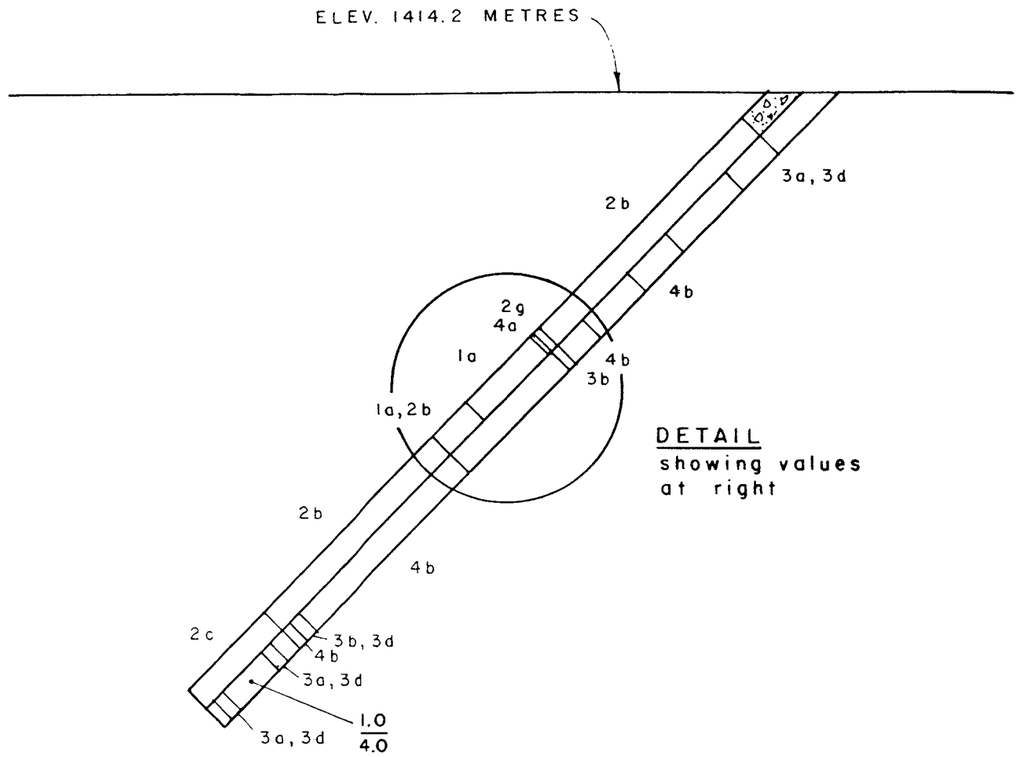

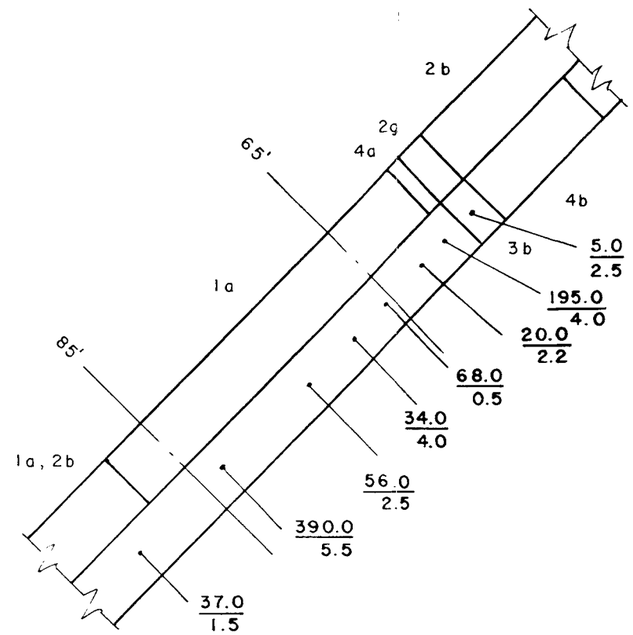

DETAIL

0 5 10

SCALE - FEET

1 FT = 0.305 m

DIP	AZIMUTH	DEPTH
-46°	086°	142'

21.0 / 0.5 — AU (ppb) / Width (ft)

0 10 20 30 40

SCALE - FEET

LEGEND

- 1a Black Graphitic Argillite
- 1b Sandstone / Siltstone / Greywacke
- 2a Volcanic Breccia
- 2b Volcanic Tuff
- 2c Volcanic Arenite
- 2d Feldspar Porphyry
- 2e Andesite
- 2f Augite Porphyry
- 2g Undifferentiated Volcanics
- 3a Weak Alteration
- 3b Moderate Alteration
- 3c Strong Alteration
- 3d Sheared, Broken, or Unconsolidated
- 4a Quartz
- 4b Quartz and/or Calcite Stringers

TWIN EAGLE RESOURCES INC.

GOLD MOUNT CLAIM GROUP
SIMILKAMEEN, M.D., TULAMEEN, B.C.

DDH - R - 6
SECTION LOOKING SOUTH

To accompany a report by:
L. Christenson, M. Sc.

Drawn by S.W.
DATE: FEBRUARY 1987

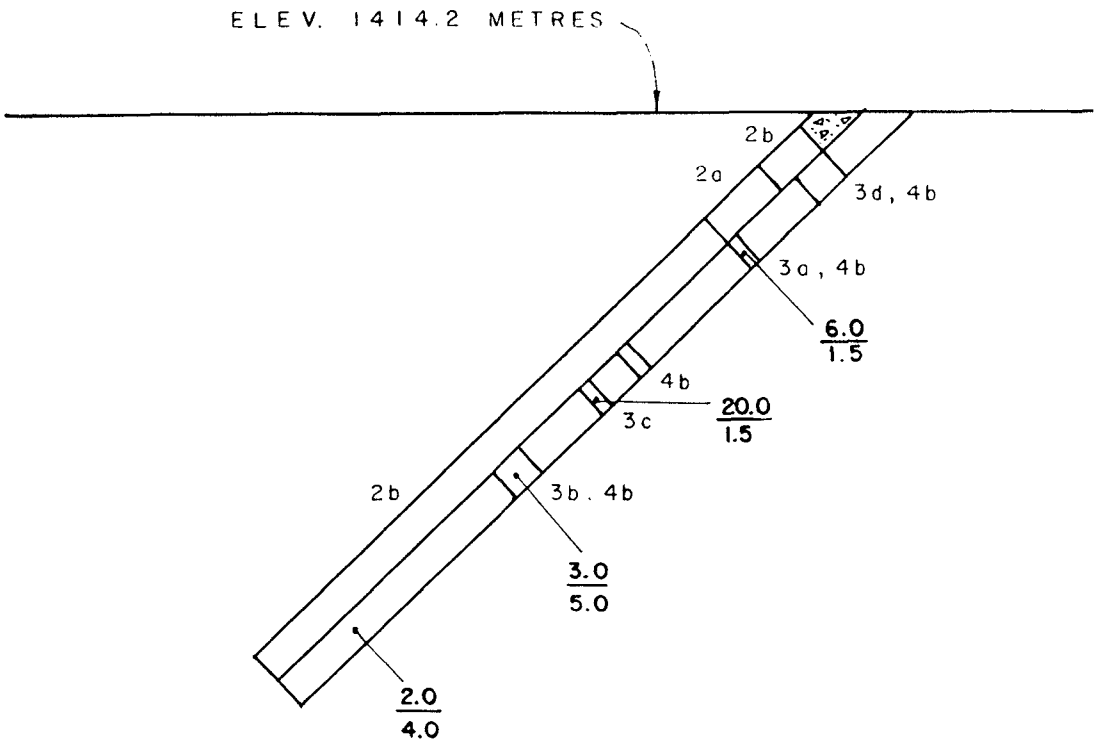

DIP	AZIMUTH	DEPTH
-44°	142°	107'

21.5 / 0.5 — AU (ppb) / Width (ft.)

LEGEND

- 1a Black Graphitic Argillite
- 1b Sandstone / Siltstone / Greywacke
- 2a Volcanic Breccia
- 2b Volcanic Tuff
- 2c Volcanic Arenite
- 2d Feldspar Porphyry
- 2e Andesite
- 2f Augite Porphyry
- 2g Undifferentiated Volcanics
- 3a Weak Alteration
- 3b Moderate Alteration
- 3c Strong Alteration
- 3d Sheared, Broken, or Unconsolidated
- 4a Quartz
- 4b Quartz and/or Calcite Stringers

0 10 20 30 40

SCALE - FEET

1 FT = 0.305 m

TWIN EAGLE RESOURCES INC.

GOLD MOUNT CLAIM GROUP
SIMILKAMEEN, M.D., TULAMEEN, B.C.

DDH - R - 7
SECTION LOOKING SOUTHWEST

To accompany a report by: L. Christenson, M. Sc.

Drawn by: S.W.
DATE: FEBRUARY 1987

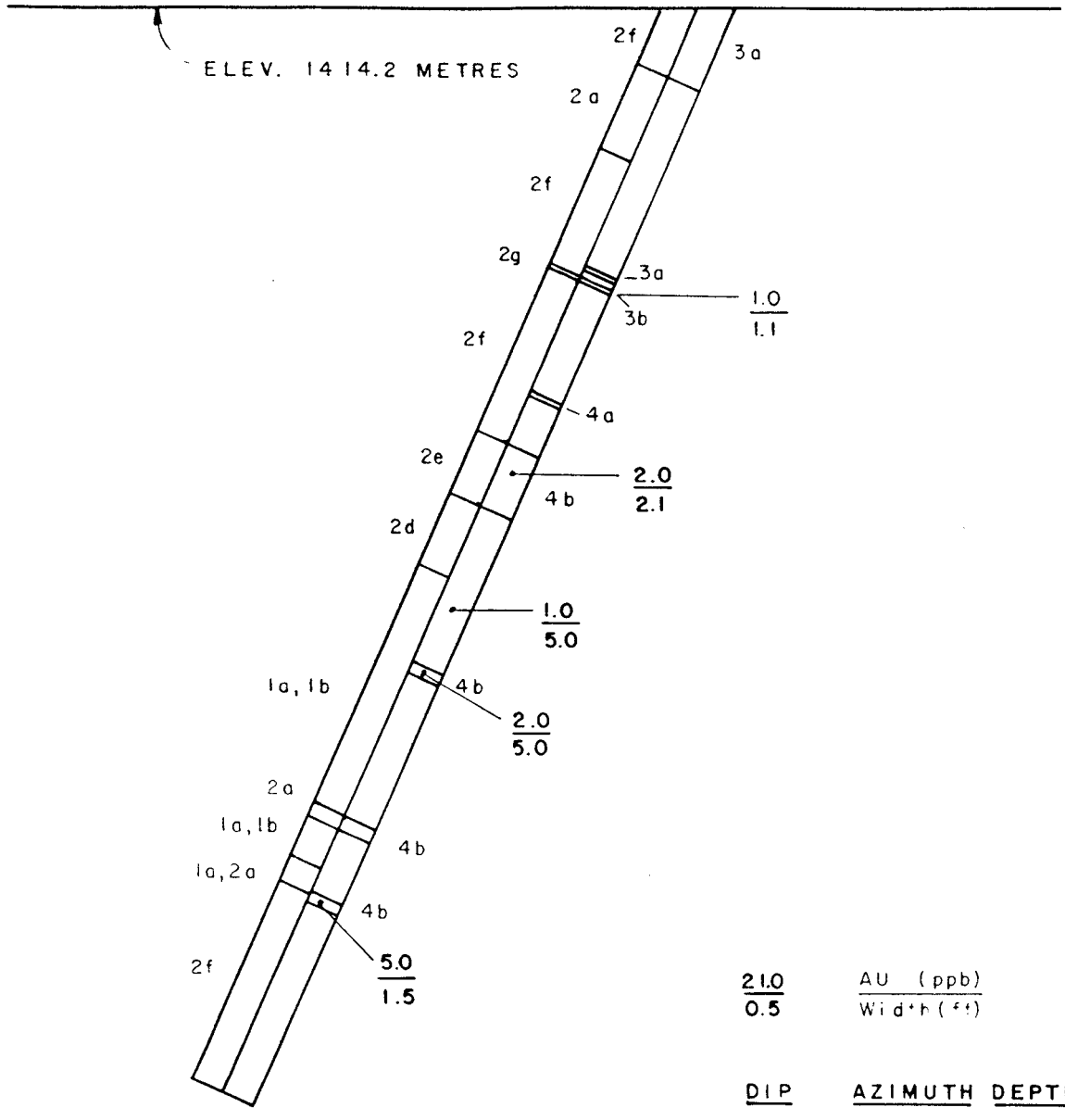

21.0 / 0.5 — AU (ppb) / Width (ft)

DIP	AZIMUTH	DEPTH
-66.5°	097°	167'

LEGEND

- 1a Black Graphitic Argillite
- 1b Sandstone / Siltstone / Greywacke
- 2a Volcanic Breccia
- 2b Volcanic Tuff
- 2c Volcanic Arenite
- 2d Feldspar Porphyry
- 2e Andesite
- 2f Augite Porphyry
- 2g Undifferentiated Volcanics
- 3a Weak Alteration
- 3b Moderate Alteration
- 3c Strong Alteration
- 3d Sheared, Broken, or Unconsolidated
- 4a Quartz
- 4b Quartz and/or Calcite Stringers

0 10 20 30 40

SCALE - FEET

1 Ft = 0.305 m

TWIN EAGLE RESOURCES INC.

GOLD MOUNT CLAIM GROUP
SIMILKAMEEN, M.D., TULAMEEN, B.C.

DDH-R-8
SECTION LOOKING SOUTH

To accompany a report by: L. Christenson, M. Sc.

Drawn by: S.W.
DATE: FEBRUARY 1987

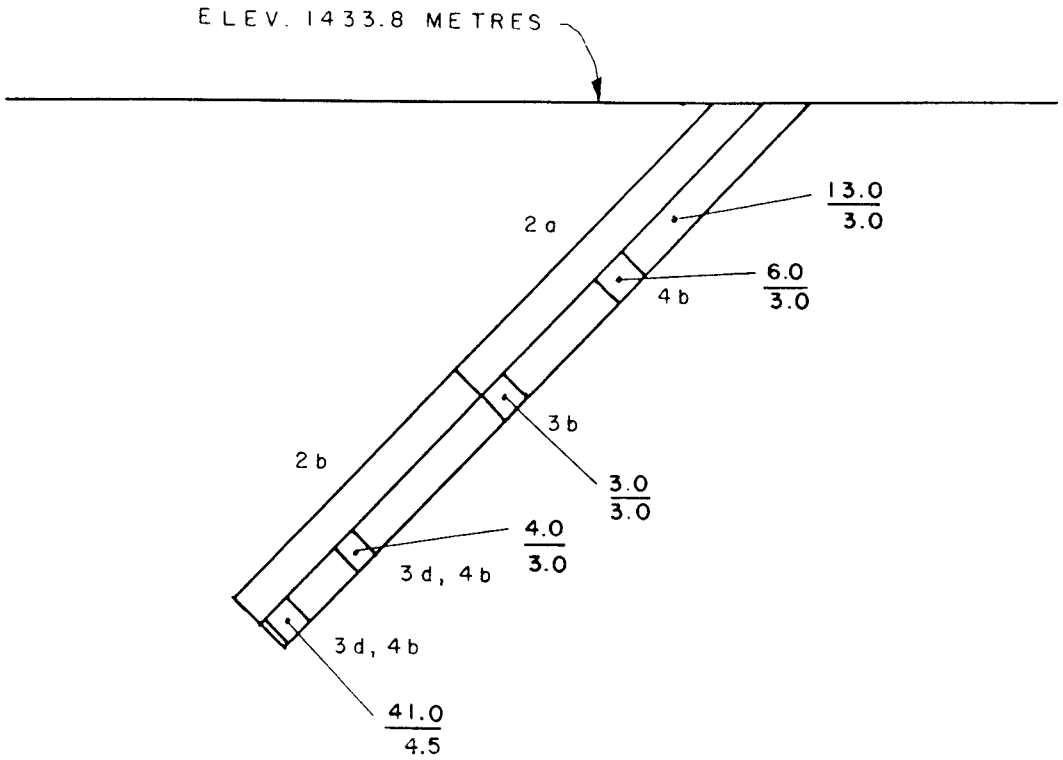

DIP	AZIMUTH	DEPTH
-46°	114°	100'

21.0 / 0.5 — AU (ppb) / Width (ft)

LEGEND

- 1a Black Graphitic Argillite
- 1b Sandstone / Siltstone / Greywacke
- 2a Volcanic Breccia
- 2b Volcanic Tuff
- 2c Volcanic Arenite
- 2d Feldspar Porphyry
- 2e Andesite
- 2f Augite Porphyry
- 2g Undifferentiated Volcanics
- 3a Weak Alteration
- 3b Moderate Alteration
- 3c Strong Alteration
- 3d Sheared, Broken, or Unconsolidated
- 4a Quartz
- 4b Quartz and/or Calcite Stringers

0 10 20 30 40

SCALE - FEET

1 FT = 0.305 m

TWIN EAGLE RESOURCES INC.

GOLD MOUNT CLAIM GROUP
SIMILKAMEEN, M.D., TULAMEEN, B.C.

DDH - R - 9
SECTION LOOKING SOUTH

To accompany a report by: L. Christenson, M. Sc.

Drawn by: S.W.
DATE: FEBRUARY 1987

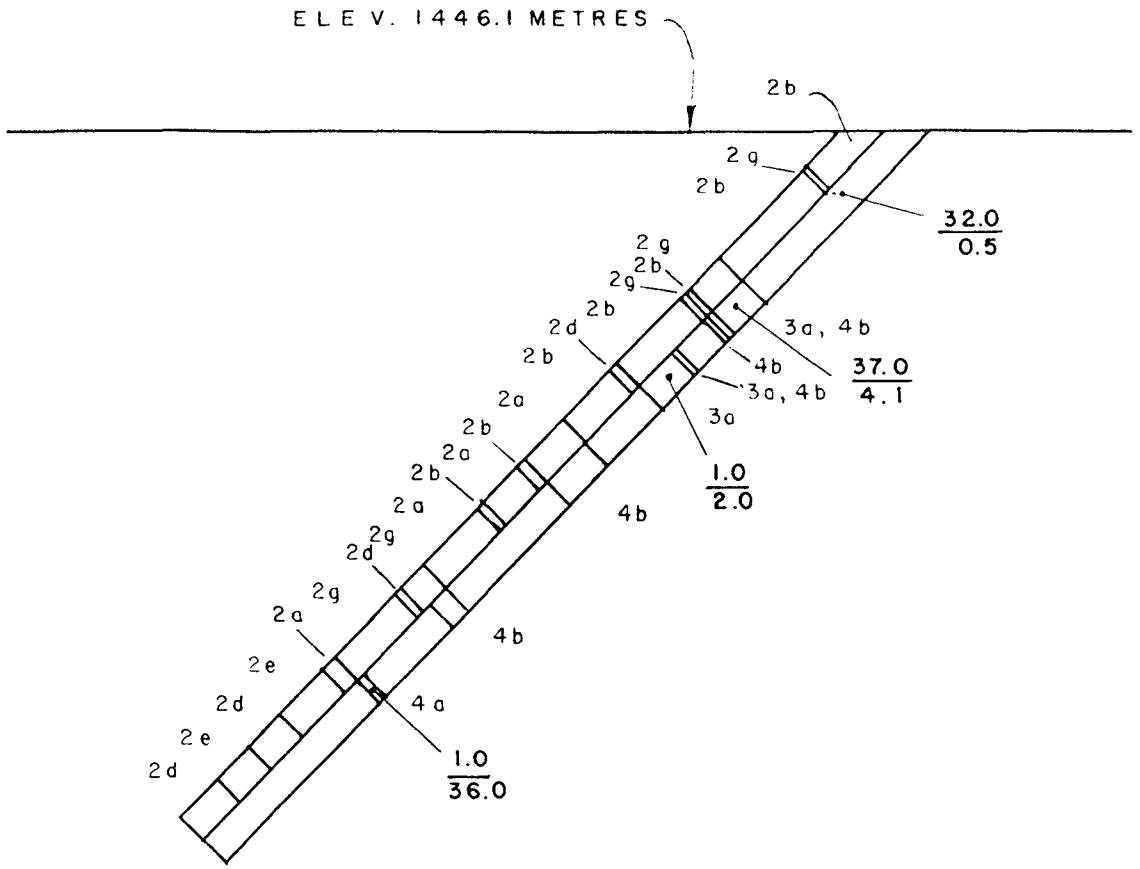

DIP	AZIMUTH	DEPTH
-44°	262.5°	127'

21.0 / 0.5 — AU (ppb) / Width (ft)

LEGEND

- 1a Black Graphitic Argillite
- 1b Sandstone / Siltstone / Greywacke
- 2a Volcanic Breccia
- 2b Volcanic Tuff
- 2c Volcanic Arenite
- 2d Feldspar Porphyry
- 2e Andesite
- 2f Augite Porphyry
- 2g Undifferentiated Volcanics
- 3a Weak Alteration
- 3b Moderate Alteration
- 3c Strong Alteration
- 3d Sheared, Broken, or Unconsolidated
- 4a Quartz
- 4b Quartz and/or Calcite Stringers

0 10 20 30 40

SCALE - FEET

1 Ft = 0.305 m

TWIN EAGLE RESOURCES INC.

GOLD MOUNT CLAIM GROUP
SIMILKAMEEN, M.D., TULAMEEN, B.C.

DDH-R-10
SECTION LOOKING NORTH

To accompany a report by: L. Christenson, M. Sc.

Drawn by: S.W.
DATE: FEBRUARY 1987

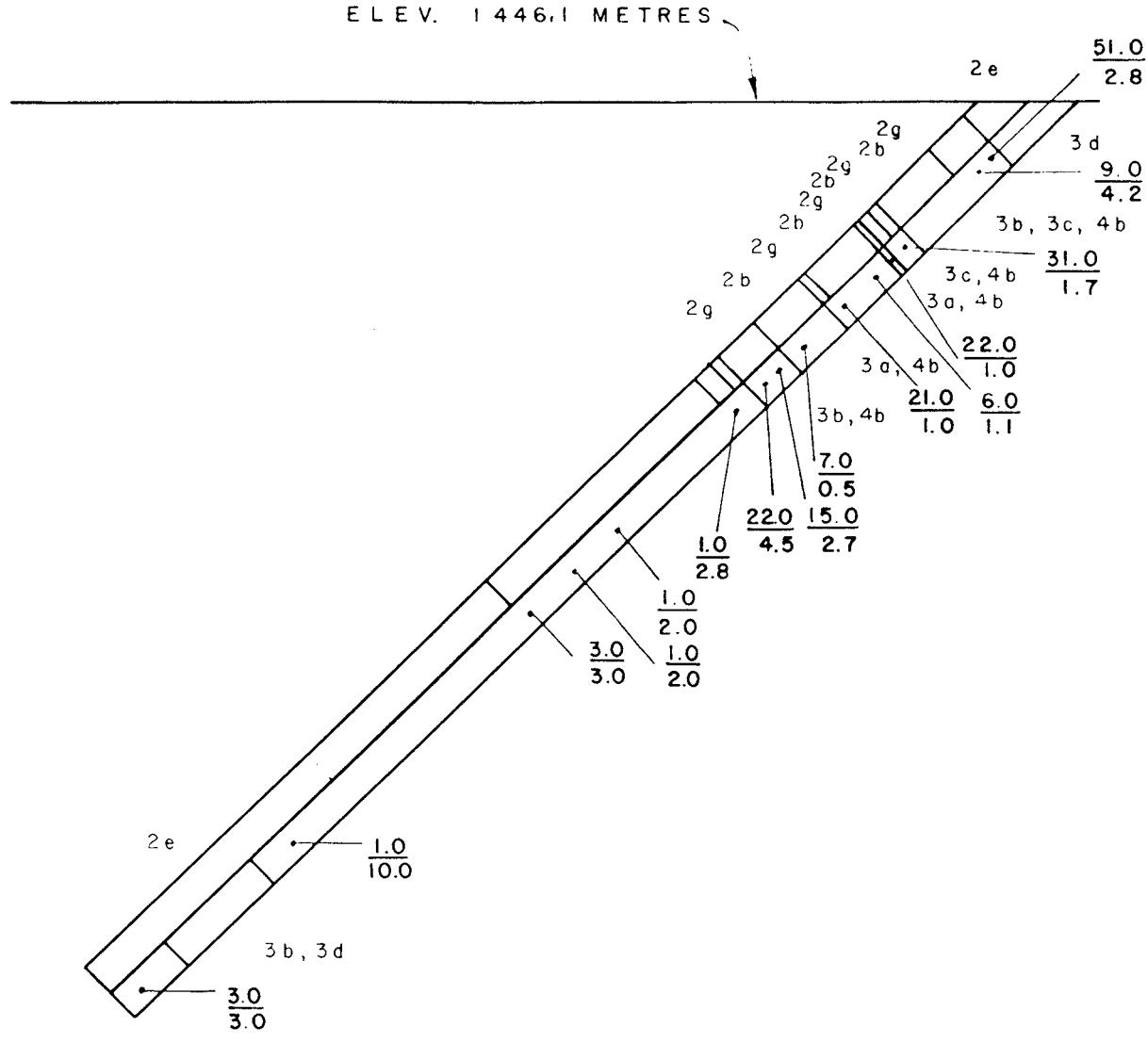

DIP	AZIMUTH	DEPTH
-44°	218°	177'

21.0 / 0.5 — AU (ppb) / Width (ft)

0 10 20 30 40

SCALE - FEET

1 FT = 0.305 m

LEGEND

- ☐ 1a Black Graphitic Argillite
- ☐ 1b Sandstone / Siltstone / Greywacke
- ☐ 2a Volcanic Breccia
- ☐ 2b Volcanic Tuff
- ☐ 2c Volcanic Arenite
- ☐ 2d Feldspar Porphyry
- ☐ 2e Andesite
- ☐ 2f Augite Porphyry
- ☐ 2g Undifferentiated Volcanics
- ☐ 3a Weak Alteration
- ☐ 3b Moderate Alteration
- ☐ 3c Strong Alteration
- ☐ 3d Sheared, Broken, or Unconsolidated
- ☐ 4a Quartz
- ☐ 4b Quartz and/or Calcite Stringers

TWIN EAGLE RESOURCES INC.

GOLD MOUNT CLAIM GROUP
SIMILKAMEEN, M.D., TULAMEEN, B.C.

DDH-R-11
SECTION LOOKING NORTHWEST

To accompany a report by: L. Christenson, M. Sc.

Drawn by: S.W.
DATE: FEBRUARY 1987

GEOLOGICAL BRANCH
ASSESSMENT REPORT

15,850

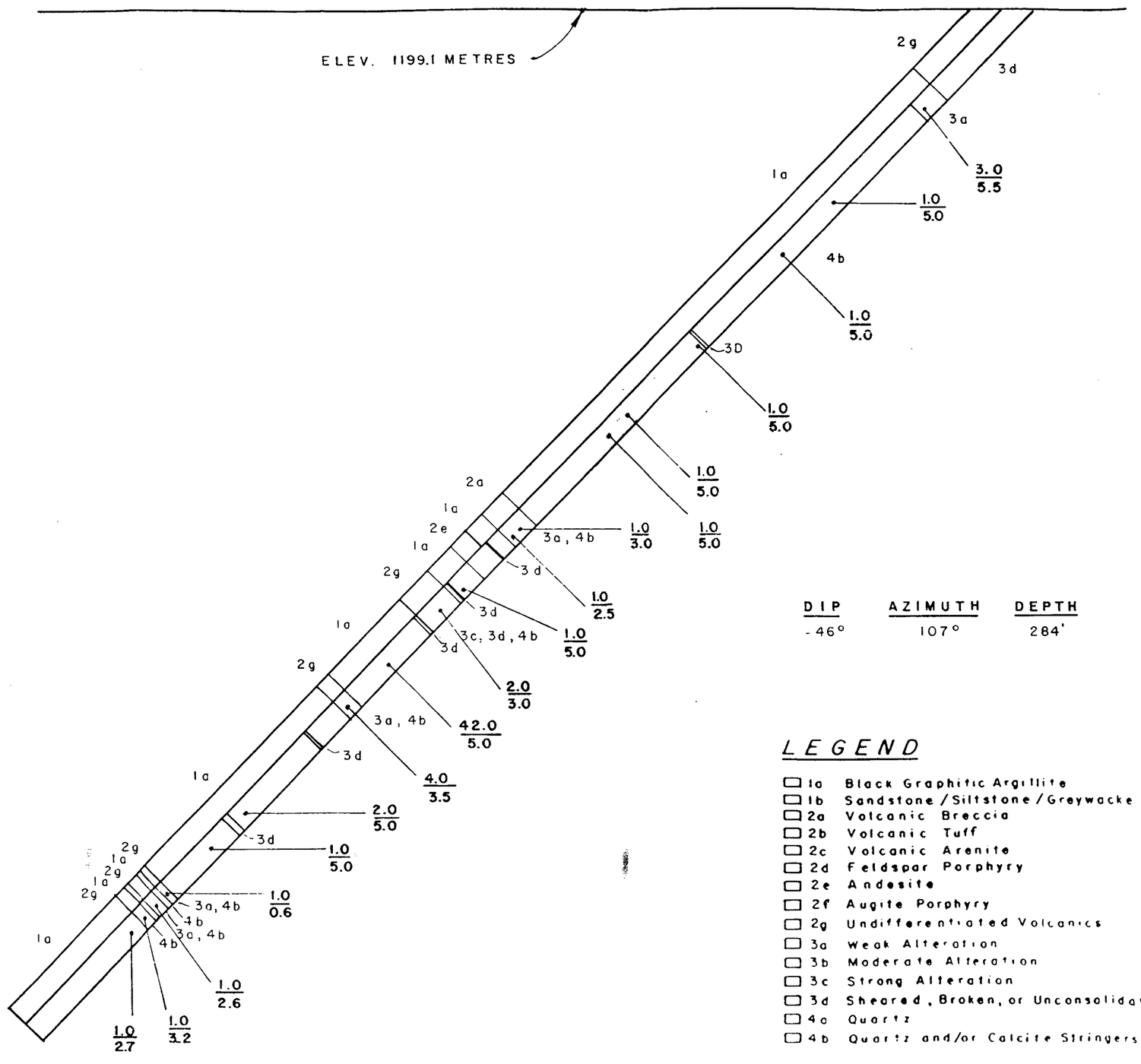

DIP	AZIMUTH	DEPTH
-46°	107°	284'

21.0 / 0.5 — AU (ppb) / Width (ft)

LEGEND

- 1a Black Graphitic Argillite
- 1b Sandstone / Siltstone / Greywacke
- 2a Volcanic Breccia
- 2b Volcanic Tuff
- 2c Volcanic Arenite
- 2d Feldspar Porphyry
- 2e Andesite
- 2f Augite Porphyry
- 2g Undifferentiated Volcanics
- 3a Weak Alteration
- 3b Moderate Alteration
- 3c Strong Alteration
- 3d Sheared, Broken, or Unconsolidated
- 4a Quartz
- 4b Quartz and/or Calcite Stringers

0 10 20 30 40

SCALE - FEET

1 Ft = 0.305 m

TWIN EAGLE RESOURCES INC.

GOLD MOUNT CLAIM GROUP
SIMILKAMEEN, M.D., TULAMEEN, B.C.

DDH-R-12
SECTION LOOKING SOUTH

To accompany a report by: L. Christenson, M. Sc.

Drawn by: S.W.
DATE: FEBRUARY 1987

GEOLOGICAL BRANCH
ASSESSMENT REPORT

15,850

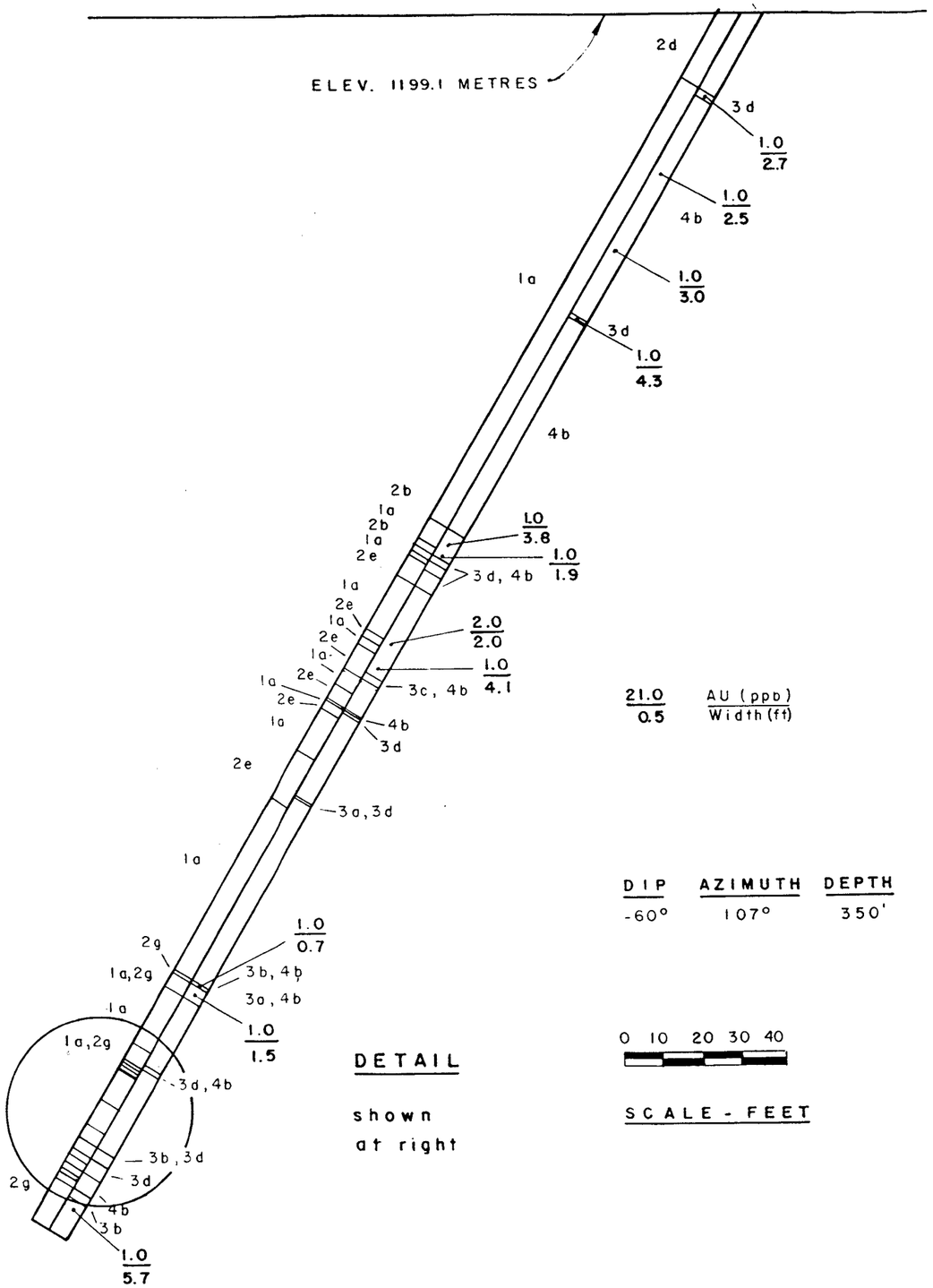

DETAIL

shown at right

21.0 / 0.5 — AU (ppb) / Width (ft)

DIP	AZIMUTH	DEPTH
-60°	107°	350'

0 10 20 30 40

SCALE - FEET

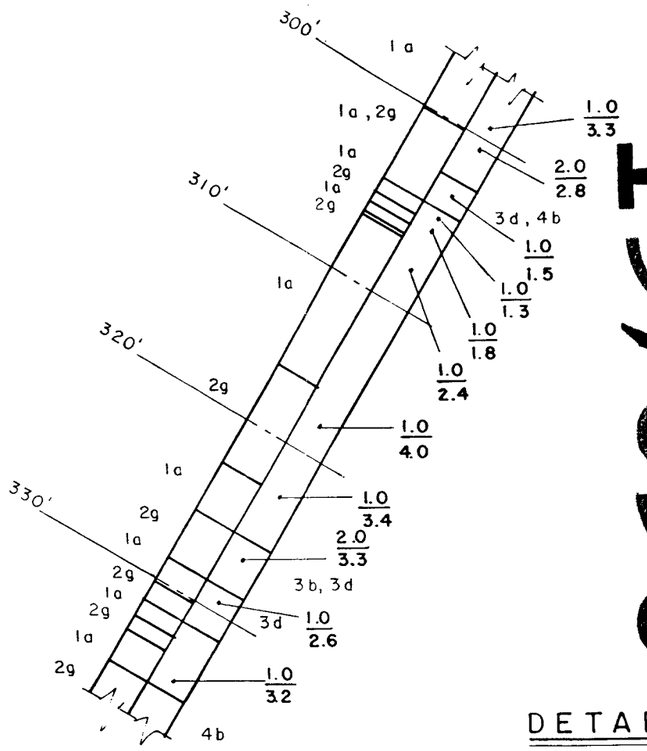

LEGEND

- 1a Black Graphitic Argillite
- 1b Sandstone / Siltstone / Greywacke
- 2a Volcanic Breccia
- 2b Volcanic Tuff
- 2c Volcanic Arenite
- 2d Feldspar Porphyry
- 2e Andesite
- 2f Augite Porphyry
- 2g Undifferentiated Volcanics
- 3a Weak Alteration
- 3b Moderate Alteration
- 3c Strong Alteration
- 3d Sheared, Broken, or Unconsolidated
- 4c Quartz
- 4b Quartz and/or Calcite Stringers

DETAIL

0 5 10 15

SCALE - FEET

1 FT = 0.305 m

TWIN EAGLE RESOURCES INC.

GOLD MOUNT CLAIM GROUP
SIMILKAMEEN, M.D., TULAMEEN, B.C.

DDH - R - 13
SECTION LOOKING SOUTH

To accompany a report by
I. Christenson, M. Sc.

Drawn by S.W.
DATE: FEBRUARY 1987

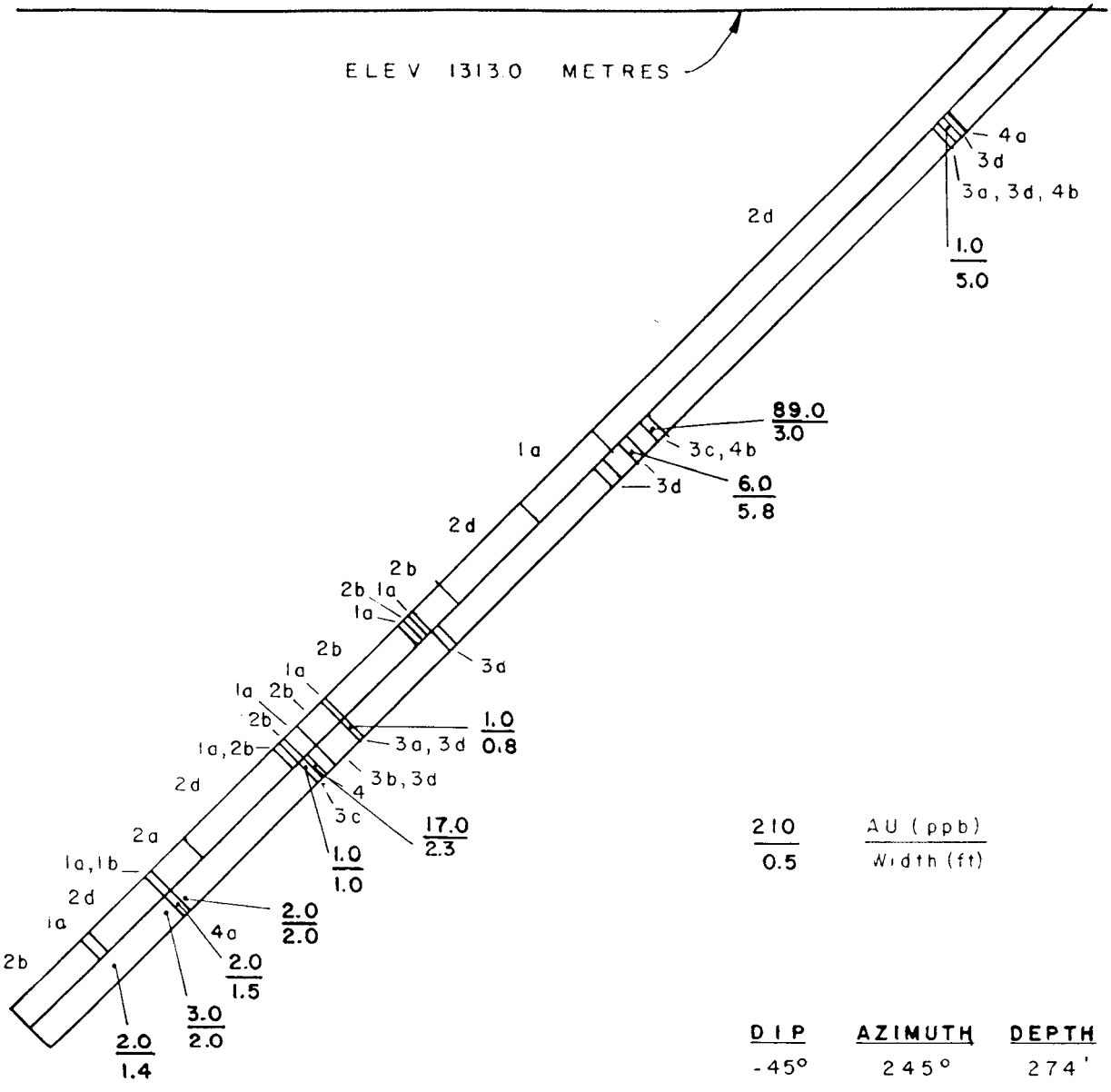

210 / 0.5 — AU (ppb) / Width (ft)

DIP	AZIMUTH	DEPTH
-45°	245°	274'

LEGEND

- 1a Black Graphitic Argillite
- 1b Sandstone / Siltstone / Greywacke
- 2a Volcanic Breccia
- 2b Volcanic Tuff
- 2c Volcanic Arenite
- 2d Feldspar Porphyry
- 2e Andesite
- 2f Augite Porphyry
- 2g Undifferentiated Volcanics
- 3a Weak Alteration
- 3b Moderate Alteration
- 3c Strong Alteration
- 3d Sheared, Broken, or Unconsolidated
- 4c Quartz
- 4b Quartz and/or Calcite Stringers

0 10 20 30 40

SCALE - FEET

1 Ft = 0.305 m

TWIN EAGLE RESOURCES INC.

GOLD MOUNT CLAIM GROUP
SIMILKAMEEN, M.D., TULAMEEN, B.C.

DDH - R - 14
SECTION LOOKING NORTHWEST

To accompany a report by: L. Christenson, M. Sc.

Drawn by: S.W.
DATE: FEBRUARY 1987

ELEV. 1359.0 METRES

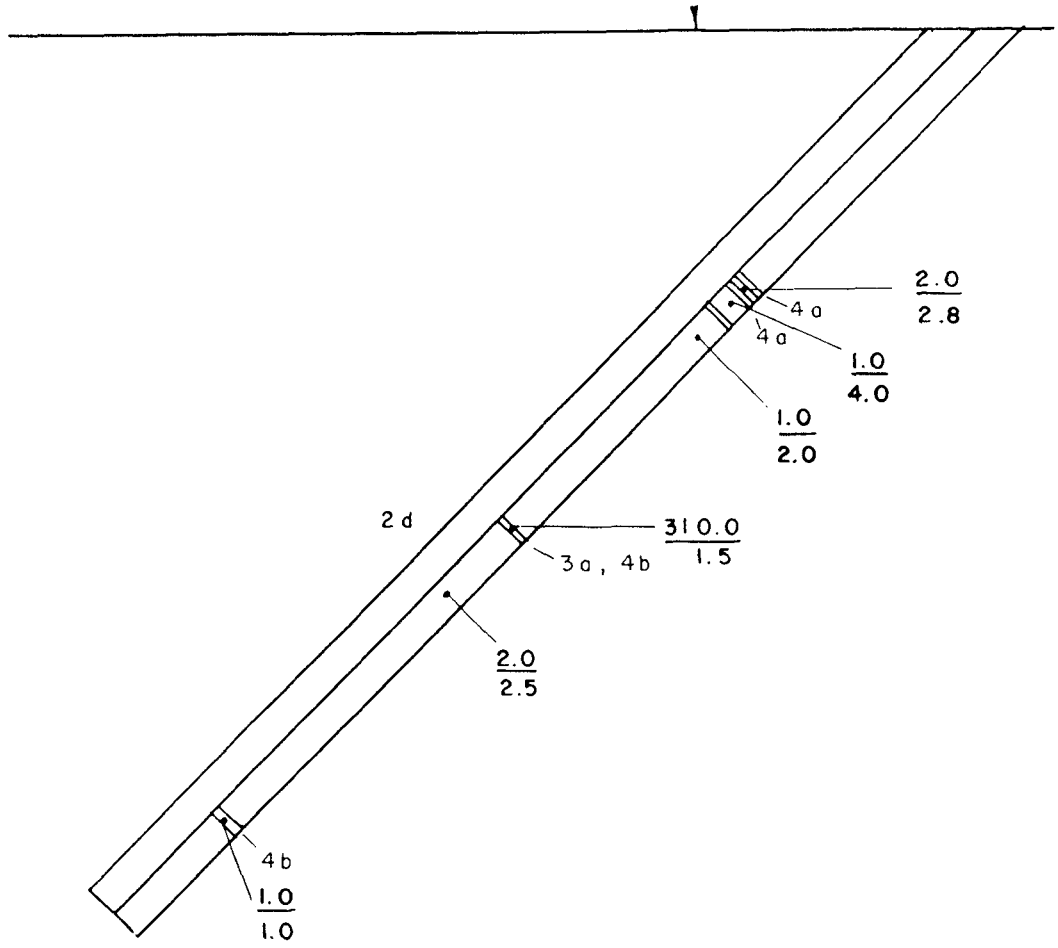

DIP	AZIMUTH	DEPTH
-45	101°	160'

21.0	AU (ppb)
0.5	Width (ft)

LEGEND

- 1a Black Graphitic Argillite
- 1b Sandstone / Siltstone / Greywacke
- 2a Volcanic Breccia
- 2b Volcanic Tuff
- 2c Volcanic Arenite
- 2d Feldspar Porphyry
- 2e Andesite
- 2f Augite Porphyry
- 2g Undifferentiated Volcanics
- 3a Weak Alteration
- 3b Moderate Alteration
- 3c Strong Alteration
- 3d Sheared, Broken, or Unconsolidated
- 4a Quartz
- 4b Quartz and/or Calcite Stringers

0 10 20 30 40

SCALE - FEET

1 FT = 0.305 m

TWIN EAGLE RESOURCES INC.

GOLD MOUNT CLAIM GROUP
SIMILKAMEEN, M.D., TULAMEEN, B.C.

DDH-R-15
SECTION LOOKING SOUTH

To accompany a report by:
L. Christenson, M. Sc.

Drawn by: S.W.
DATE: FEBRUARY 1987

STRATO GEOLOGICAL ENGINEERING LTD.

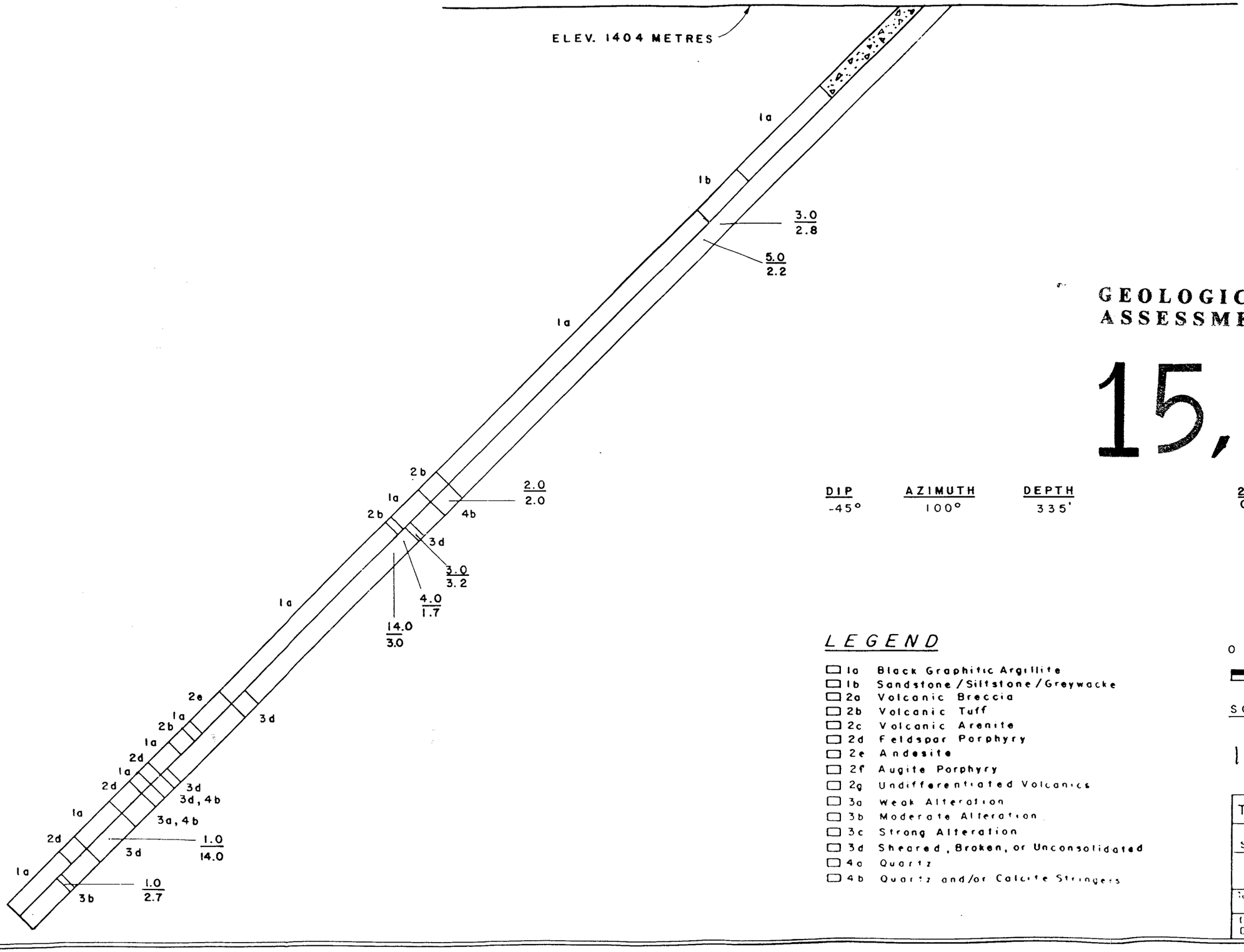

GEOLOGICAL BRANCH
ASSESSMENT REPORT

15,850

DIP	AZIMUTH	DEPTH
-45°	100°	335'

21.0 / 0.5 — Au (ppb) / Width (ft)

LEGEND

- 1a Black Graphitic Argillite
- 1b Sandstone / Siltstone / Greywacke
- 2a Volcanic Breccia
- 2b Volcanic Tuff
- 2c Volcanic Arenite
- 2d Feldspar Porphyry
- 2e Andesite
- 2f Augite Porphyry
- 2g Undifferentiated Volcanics
- 3a Weak Alteration
- 3b Moderate Alteration
- 3c Strong Alteration
- 3d Sheared, Broken, or Unconsolidated
- 4a Quartz
- 4b Quartz and/or Calcite Stringers

0 10 20 30 40

SCALE - FEET

1 Ft = 0.305 m

TWIN EAGLE RESOURCES INC.

GOLD MOUNT CLAIM GROUP
SIMILKAMEEN, M.D., TULAMEEN, B.C.

DDH-R-16
SECTION LOOKING SOUTH

To accompany a report by:
L. Christenson, M. Sc.

Drawn by: S.W.
DATE: FEBRUARY 1987

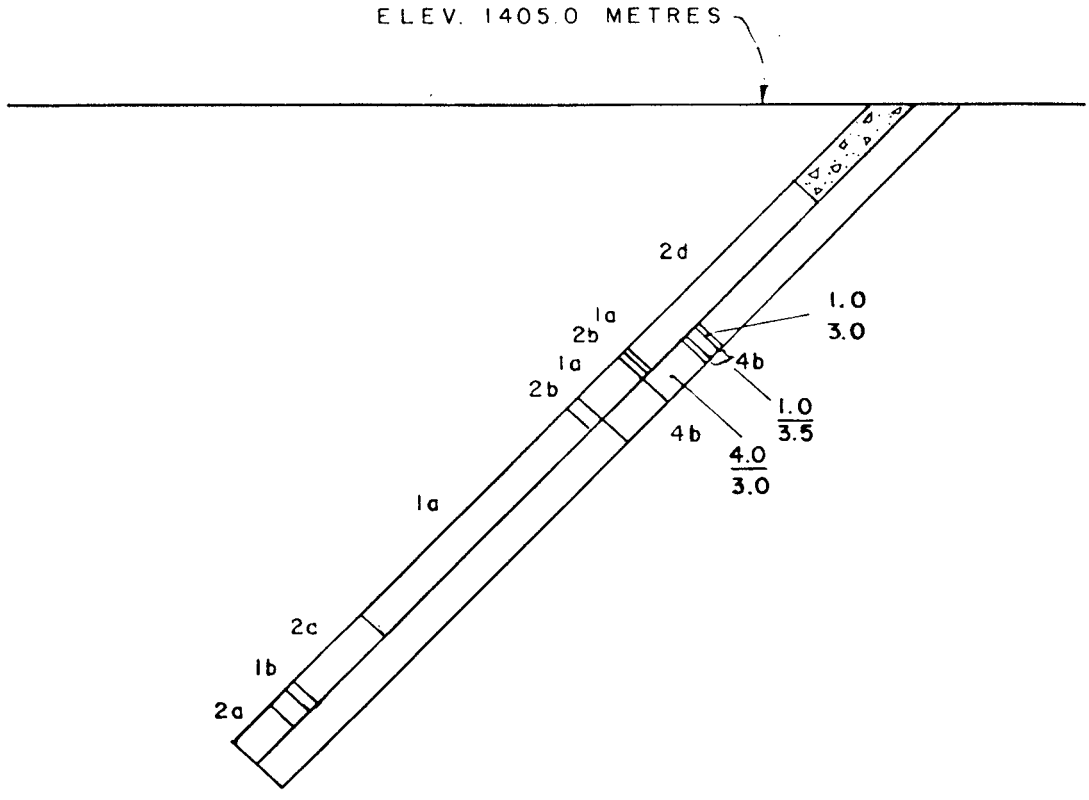

DIP	AZIMUTH	DEPTH
-45°	105°	116'

210	AU (ppb)
0.5	Width (ft)

LEGEND

- ☐ 1a Black Graphitic Argillite
- ☐ 1b Sandstone / Siltstone / Greywacke
- ☐ 2a Volcanic Breccia
- ☐ 2b Volcanic Tuff
- ☐ 2c Volcanic Arenite
- ☐ 2d Feldspar Porphyry
- ☐ 2e Andesite
- ☐ 2f Augite Porphyry
- ☐ 2g Undifferentiated Volcanics
- ☐ 3a Weak Alteration
- ☐ 3b Moderate Alteration
- ☐ 3c Strong Alteration
- ☐ 3d Sheared, Broken, or Unconsolidated
- ☐ 4a Quartz
- ☐ 4b Quartz and/or Calcite Stringers

0 10 20 30 40

SCALE - FEET

1 FT = 0.305 m

TWIN EAGLE RESOURCES INC.

GOLD MOUNT CLAIM GROUP
SIMILKAMEEN, M.D., TULAMEEN, B.C.

DDH - R - 17
SECTION LOOKING SOUTH

To accompany a report by:
L. Christenson, M. Sc.

Drawn by: S.W.
DATE: FEBRUARY 1987

APPENDIX II

Geochemical Preparation and Analytical Procedures

ACME ANALYTICAL LABORATORIES LTD.
Assaying & Trace Analysis
852 E. Hastings St., Vancouver, B.C. V6A 1R6
Telephone : 253 - 3158

GEOCHEMICAL LABORATORY METHODOLOGY - 1985

Sample Preparation

1. Soil samples are dried at 60°C and sieved to -80 mesh.
2. Rock samples are pulverized to -100 mesh.

Geochemical Analysis (AA and ICP)

0.5 gram samples are digested in hot dilute aqua regia in a boiling water bath and diluted to 10 ml with demineralized water. Extracted metals are determined by :

A. Atomic Absorption (AA)

Ag*, Bi*, Cd*, Co, Cu, Fe, Ga, In, Mn, Mo, Ni, Pb, Sb*, Tl, V, Zn
(* denotes with background correction.)

B. Inductively Coupled Argon Plasma (ICP)

Ag, Al, As, Au, B, Ba, Bi, Ca, Cd, Co, Cu, Cr, Fe, K, La, Mg, Mn, Mo, Na, Ni, P, Pb, Sb, Sr, Th, Ti, U, V, W, Zn.

Geochemical Analysis for Au*

10.0 gram samples that have been ignited overnite at 600°C are digested with 30 mls hot dilute aqua regia, and 75 mls of clear solution obtained is extracted with 5 mls Methyl Isobutyl Ketone.

Au is determined in the MIBK extract by Atomic Absorption using background correction (Detection Limit = 1 ppb).

Geochemical Analysis for Au**, Pd, Pt, Rh

10.0 - 30.0 gram samples are subjected to Fire Assay preconcentration techniques to produce silver beads.

The silver beads are dissolved and Au, Pd, Pt, and Rh are determined in the solution by graphite furnace Atomic Absorption. Detections - Au=1 ppb; Pd, Pt, Rh=5 ppb

Geochemical Analysis for As

0.5 gram samples are digested with hot dilute aqua regia and diluted to 10 ml. As is determined in the solution by Graphite Furnace Atomic Absorption (AA) or by Inductively Coupled Argon Plasma (ICP).

Geochemical Analysis for Barium

0.25 gram samples are digested with hot NaOH and EDTA solution, and diluted to 20 ml.

Ba is determined in the solution by ICP.

Geochemical Analysis for Tungsten

0.25 gram samples are digested with hot NaOH and EDTA solution, and diluted to 20 ml. W in the solution determined by ICP with a detection of 1 ppm.

Geochemical Analysis for Selenium

0.5 gram samples are digested with hot dilute aqua regia and dilute to 10 ml with H_2O. Se is determined with $NaBH_3$ with Flameless AA. Detection 0.1 ppm.

ACME ANALYTICAL LABORATORIES LTD.
Assaying & Trace Analysis
852 E. Hastings St., Vancouver, B.C. V6A 1R6
Telephone : 253 - 3158

Geochemical Analysis for Uranium

0.5 gram samples are digested with hot aqua regia and diluted to 10 ml.

Aliquots of the acid extract are solvent extracted using a salting agent and aliquots of the solvent extract are fused with NaF, K_2CO_3 and Na_2CO_3 flux in a platinum dish.

The fluorescence of the pellet is determined on the Jarrel Ash Fluorometer.

Geochemical Analysis for Fluorine

0.25 gram samples are fused with sodium hydroxide and leached with 10 ml water. The solution is neutralized, buffered, adjusted to pH 7.8 and diluted to 100 ml.

Fluorine is determined by Specific Ion Electrode using an Orion Model 404 meter.

Geochemical Analysis for Tin

1.0 gram samples are fused with ammonium iodide in a test tube. The sublimed iodine is leached with dilute hydrochloric acid.

The solution is extracted with MIBK and tin is determined in the extract by Atomic Absorption.

Geochemical Analysis for Chromium

0.1 gram samples are fused with Na_2O_2. The melt is leached with HCl and analysed by AA or ICP. Detection 1 ppm.

Geochemical Analysis for Hg

0.5 gram samples is digested with aqua regia and diluted with 20% HCl.

Hg in the solution is determined by cold vapour AA using a F & J scientific Hg assembly. An aliquot of the extract is added to a stannous chloride / hydrochloric acid solution. The reduced Hg is swept out of the solution and passed into the Hg cell where it is measured by AA.

Geochemical Analysis for Ga & Ge

0.5 gram samples are digested with hot aqua regia with HF in pressure bombs.

Ga and Ge in the solution are determined by graphite furnace AA. Detection 1 ppm.

Geochemical Analysis for Tl (Thallium)

0.5 gram samples are digested with 1:1 HNO_3. Tl is determined by graphite AA. Detection .1 ppm.

Geochemical Analysis for Te (Tellurium)

0.5 gram samples are digested with hot aqua regia. The Te extracted in MIBK is analysed by AA graphite furnace. Detection .1 ppm.

Geochemical Whole Rock

0.1 gram is fused with .6 gm $LiBO_2$ and dissolved in 50 mls 5% HNO_3. Analysis is by ICP or M.S. ICP gives excellent precision for major components. The M.S. can analyze for up to 50 elements.

APPENDIX III A

Soil, Rock, and Diamond Drill Core

Assay Certificates

ACME ANALYTICAL LABORATORIES LTD.
852 E.HASTINGS ST.VANCOUVER B.C. V6A 1R6
PHONE 253-3158 DATA LINE 251-1011

DATE RECEIVED: DEC 1 1986

DATE REPORT MAILED: Dec. 5/86...

GEOCHEMICAL ICP ANALYSIS

.500 GRAM SAMPLE IS DIGESTED WITH 3ML 3-1-2 HCL-HNO3-H2O AT 95 DEG. C FOR ONE HOUR AND IS DILUTED TO 10 ML WITH WATER.
THIS LEACH IS PARTIAL FOR MN.FE.CA.P.CR.MG.BA.TI.B.AL.NA.K.W.SI.ZR.CE.SN.Y.NB AND TA. AU DETECTION LIMIT BY ICP IS 3 PPM.
- SAMPLE TYPE: SOILS -80MESH AU* ANALYSIS BY AA FROM 10 GRAM SAMPLE.

ASSAYER: D. Toye .DEAN TOYE. CERTIFIED B.C. ASSAYER.

STRATO GEOLOGICAL PROJECT - RABBITT FILE# 86-3873 PAGE 1

SAMPLE#	Cu PPM	Pb PPM	Zn PPM	Ag PPM	Ni PPM	Au* PPB
BR-3	24	14	80	.1	13	1
R L50N 3+00E	24	7	84	.1	19	1
R L50N 4+00E	37	6	109	.1	36	85
R L50N 4+50E	22	10	116	.1	31	1
R L50N 5+00E	59	12	118	.1	57	1
R L50N 5+50E	12	13	105	.1	11	1
R L50N 6+00E	11	10	124	.1	15	5
R L0+50N 0+00E	43	15	163	.1	22	780
R L0+50N 0+50E	70	9	130	.1	36	1
R L0+50N 1+00E	34	9	126	.2	23	1
R L0+50N 1+50E	21	12	141	.1	27	1
R L0+50N 2+00E	21	13	94	.1	30	1
R L0+00N 0+00E	63	14	176	.2	24	16
R L0+00N 0+50E	33	10	152	.3	19	2
R L0+00N 1+00E	77	16	185	.1	29	1
R L0+00N 1+50E	30	10	124	.1	42	1
R L0+00N 2+00E	71	17	130	.2	45	13
R L0+50S 0+00E	74	12	114	.1	63	1
R L0+50S 0+50E	54	6	158	.2	14	7
R L0+50S 1+00E	63	13	111	.1	40	1
R L0+50S 1+50E	27	15	95	.1	51	16
R L0+50S 2+00E	78	7	90	.1	154	30
R L0+50S 2+50E	31	11	157	.1	44	1
R L0+50S 3+00E	70	10	110	.3	40	1
R L0+50S 3+50E	35	13	114	.3	19	1
R L0+50S 4+00E	18	14	100	.1	20	1
R L0+50S 4+50E	22	13	163	.1	17	2
R L0+50S 5+00E	35	12	122	.3	24	2
R L0+50S 5+38E	54	16	116	.1	18	14
R L1+00S 0+00E	46	12	84	.2	25	1
R L1+00S 0+50E	46	8	140	.2	11	1
R L1+00S 1+00E	64	13	187	.1	47	2
R L1+00S 1+50E	38	12	136	.3	95	1
R L1+00S 2+00E	58	14	94	.1	132	1
R L1+00S 3+00E	36	11	142	.1	35	1
R L1+00S 3+50E	34	12	88	.2	25	1
STD C/AU-S	60	35	135	7.2	68	52

SAMPLE#	Cu PPM	Pb PPM	Zn PPM	Ag PPM	Ni PPM	Au* PPB
R L1+00S 4+00E	36	9	84	.1	23	1
R L1+00S 5+00E	48	11	90	.2	34	29
R L1+00S 5+50E	100	21	112	.2	111	5
R L1+50S 1+50W	46	18	175	.3	27	1
R L1+50S 1+00W	129	11	95	.1	29	1
R L1+50S 0+50W	21	8	116	.1	16	1
R L1+50S 0+00E	83	13	104	.2	27	2
R L1+50S 0+50E	52	4	140	.1	20	11
R L1+50S 1+00E	61	13	234	.1	53	1
R L1+50S 1+50E	65	12	182	.2	190	1
R L2+00S 1+50W	38	10	157	.2	26	1
R L2+00S 1+00W	25	10	134	.3	22	1
R L2+00S 0+50W	25	10	128	.1	21	24
R L2+00S 0+00E	85	14	161	.6	30	2
R L2+00S 0+50E	50	8	107	.1	17	13
R L2+00S 1+00E	28	12	147	.2	27	1
R L2+00S 1+50E	63	5	273	.1	61	1
R L2+00S 2+00E	49	6	129	.1	99	1
R L2+00S 2+50E	35	6	154	.1	44	1
R L2+00S 3+00E	72	12	144	.6	89	45
R L2+00S 4+00E	13	8	110	.2	15	1
R L2+00S 4+50E	30	13	162	.1	26	1
R L2+00S 5+00E	26	11	112	.1	19	1
R L2+00S 5+50E	23	9	83	.1	27	1
R L2+00S 6+00E	35	8	107	.2	25	2
R L2+00S 6+50E	55	10	129	.1	56	1
R L2+00S 7+00E	174	14	124	.1	90	1
R L2+50S 1+50W	44	9	145	.1	16	1
R L2+50S 1+00W	59	7	125	.1	36	1
R L2+50S 0+50W	39	10	133	.1	29	7
R L2+50S 0+00W	39	14	116	.1	23	1
R L3+00S 0+50E	41	13	127	.1	23	1
R L3+00S 1+00E	102	16	185	.5	104	1
R L3+00S 1+50E	91	16	300	.1	60	1
R L3+00S 2+00E	133	16	132	.1	24	1
R L3+00S 2+50E	103	15	196	.7	74	2
STD C/AU-S	61	37	136	7.3	66	49

SAMPLE#	Cu PPM	Pb PPM	Zn PPM	Ag PPM	Ni PPM	Au* PPB
R L3+00S 3+00E	32	8	151	.1	27	1
R L3+00S 3+50E	54	4	205	.1	56	1
R L3+00S 4+00E	31	88	149	.2	39	1
R L3+00S 4+50E	19	6	142	.1	30	3
R L3+00S 5+00E	59	14	149	.1	75	1
R L3+00S 6+50E	46	11	193	.1	60	1
R L3+00S 7+00E	92	9	277	.3	55	2
R L3+00S 7+50E	70	9	82	.1	128	1
R L3+00S 8+00E	64	9	72	.1	55	1
R L4+00S 0+50E	43	8	136	.1	23	1
R L4+00S 1+00E	58	6	112	.1	56	1
R L4+00S 1+50E	153	9	150	.1	68	1
R L4+00S 2+00E	77	9	170	.1	116	1
R L4+00S 2+50E	15	5	128	.3	22	1
R L4+00S 3+00E	51	6	270	.3	55	1
R L4+00S 3+50E	25	6	191	.5	26	1
R L4+00S 4+00E	62	10	266	.1	41	4
R L4+00S 4+50E	39	6	107	.1	38	1
R L4+00S 5+00E	26	4	94	.2	30	1
R L4+00S 5+50E	55	10	133	.1	54	1
R L4+00S 6+00E	33	6	159	.2	121	1
R L4+00S 6+50E	122	15	323	.9	98	2
R L4+00S 7+50E	213	7	109	.1	43	1
R L4+00S 8+00E	33	7	160	.1	36	1
R L5+00S 0+50E	42	9	105	.1	34	9
R L5+00S 1+00E	39	4	157	.1	40	1
R L5+00S 1+50E	47	9	204	.3	49	1
R L5+00S 2+00E	29	8	183	.1	33	1
R L5+00S 2+50E	22	3	151	.1	50	1
R L5+00S 3+00E	26	2	139	.2	30	4
R L5+00S 3+50E	50	5	141	.3	30	1
R L5+00S 4+00E	76	3	142	.1	27	1
R L5+00S 4+50E	43	3	76	.2	20	1
R L5+00S 5+00E	30	5	85	.1	46	1
R L5+00S 5+50E	40	2	80	.1	48	1
R L5+00S 6+00E	22	2	165	.3	54	1
STD C/AU-S	61	35	133	6.8	68	53

SAMPLE#	Cu PPM	Pb PPM	Zn PPM	Ag PPM	Ni PPM	Au* PPB
R L5+00S 6+50E	52	12	130	.1	89	1
R L5+00S 7+00E	52	11	206	.2	41	8
R L5+00S 7+50E	57	15	169	.1	22	2
R L5+00S 8+00E	71	12	117	.1	22	3
R L6+00S 0+50E	24	17	131	.1	22	1
R L6+00S 1+00E	36	18	109	.1	42	2
R L6+00S 1+50E	43	13	153	.2	42	1
R L6+00S 2+00E	48	11	151	.1	84	3
R L6+00S 2+50E	49	13	209	.2	55	1
R L6+00S 3+00E	64	17	217	.1	54	8
R L6+00S 3+50E	50	12	213	.7	43	3
R L6+00S 4+00E	63	13	194	.2	31	1
R L6+00S 4+50E	42	13	193	.3	32	2
R L6+00S 5+00E	71	11	86	.2	56	3
R L6+00S 5+50E	91	11	150	.1	33	1
R L6+00S 6+00E	43	10	171	.3	56	1
R L6+00S 6+50E	53	15	164	.3	54	2
R L6+00S 7+00E	51	13	158	.1	33	1
R L6+00S 7+50E	48	12	148	.1	26	1
R L6+00S 8+00E	38	8	103	.1	45	3
R L7+00S 0+50E	73	15	114	.2	42	1
R L7+00S 1+00E	51	6	126	.2	57	2
R L7+00S 1+50E	64	7	113	.1	63	1
R L7+00S 2+00E	79	16	157	.1	199	1
R L7+00S 2+50E	72	14	442	.1	120	1
R L7+00S 3+00E	66	15	314	.1	77	1
R L7+00S 3+50E	44	16	219	.1	29	1
R L7+00S 4+00E	69	17	340	.6	70	1
R L7+00S 4+50E	164	15	169	.1	19	1
R L7+00S 5+00E	75	11	146	.3	40	1
R L7+00S 5+50E	99	11	117	.2	66	1
R L7+00S 6+00E	45	17	286	.1	47	2
R L7+00S 6+50E	27	8	172	.1	18	1
R L7+00S 7+00E	50	10	143	.1	21	1
R L7+00S 7+50E	72	16	138	.2	29	1
R L7+00S 8+00E	104	7	148	.1	58	1
STD C/AU-S	62	37	136	7.3	67	49

SAMPLE#	Cu PPM	Pb PPM	Zn PPM	Ag PPM	Ni PPM	Au* PPB
R L8+00S 0+50E	113	6	100	.1	47	1
R L8+00S 1+00E	73	2	123	.1	57	1
R L8+00S 1+50E	78	8	134	.1	56	1
R L8+00S 2+00E	63	11	334	.2	67	2
R L8+00S 2+50E	122	9	266	.3	173	1
R L8+00S 3+00E	126	14	278	.6	133	1
R L8+00S 3+50E	102	17	322	.4	98	1
R L8+00S 4+50E	67	10	206	.2	35	1
R L8+00S 5+00E	98	10	143	.1	35	1
R L8+00S 5+50E	84	8	127	.5	31	2
R L8+00S 6+00E	78	13	157	.2	62	1
R L8+00S 6+50E	74	10	173	.2	48	1
R L8+00S 7+00E	53	7	271	.3	54	1
R L8+00S 8+00E	84	10	137	.3	24	1
R L9+00S 0+50E	128	16	120	.1	34	49
R L9+00S 1+00E	85	13	169	.2	46	1
R L9+00S 1+50E	51	13	227	.1	42	1
R L9+00S 2+00E	104	6	90	.1	94	1
R L9+00S 2+50E	74	9	102	.1	77	1
R L9+00S 3+00E	96	6	86	.1	98	1
R L9+00S 3+50E	90	7	135	.1	88	1
R L9+00S 4+00E	76	2	130	.3	106	2
R L9+00S 4+50E	56	12	200	.1	49	1
R L9+00S 5+00E	51	9	181	.1	39	1
R L9+00S 5+50E	105	7	128	.1	37	38
R L9+00S 6+00E	66	18	160	.1	36	1
R L9+00S 6+50E	94	14	120	.1	12	1
R L9+00S 7+00E	112	8	123	.2	25	1
R L9+00S 7+50E	127	12	174	.4	73	1
R L9+00S 8+00E	96	10	129	.2	151	1
R L10+00S 0+50E	116	11	111	.1	35	2
R L10+00S 1+00E	122	16	116	.1	44	1
R L10+00S 1+50E	54	13	93	.1	51	1
R L10+00S 2+00E	53	4	108	.2	40	1
R L10+00S 2+50E	86	5	97	.1	57	1
R L10+00S 3+00E	100	11	123	.1	76	1
STD C/AU-S	60	41	137	7.1	67	48

SAMPLE#	Cu PPM	Pb PPM	Zn PPM	Ag PPM	Ni PPM	Au* PPB
R L10+00S 3+50E	90	3	126	.1	102	1
R L10+00S 4+00E	83	9	92	.1	116	1
R L10+00S 4+50E	59	11	273	.1	49	1
R L10+00S 5+00E	106	12	123	.3	47	1
R L10+00S 5+50E	178	11	115	.3	49	1
R L10+00S 6+00E	81	16	113	.1	36	1
R L10+00S 6+50E	43	11	75	.1	75	1
R L10+00S 7+00E	155	9	122	.3	36	1
R L10+00S 7+50E	35	11	436	.1	43	2
R L10+00S 8+00E	85	22	360	.7	77	1
R L11+00S 1+00E	254	11	124	.1	45	3
R L11+00S 2+50E	209	13	247	.4	88	1
R L11+00S 3+00E	124	10	180	.3	107	4
R L11+00S 3+50E	107	17	137	.1	72	1
R L11+00S 4+00E	128	8	118	.2	56	1
R L11+00S 4+50E	79	13	311	.3	71	1
R L11+00S 5+00E	83	11	154	.3	49	1
R L11+00S 6+00E	146	11	104	.5	41	1
R L11+00S 6+50E	44	9	134	.1	36	2
R L11+00S 7+00E	111	17	139	.1	55	1
R L11+00S 7+50E	56	13	362	.1	63	1
R L11+00S 8+00E	84	13	246	.1	56	1
R L12+00S 0+50E	99	11	121	.1	46	1
R L12+00S 1+00E	131	15	97	.1	43	1
R L12+00S 2+00E	28	8	119	.1	50	6
R L12+00S 2+50E	69	10	167	.1	72	1
R L12+00S 3+00E	66	10	156	.1	65	46
R L12+00S 3+50E	70	14	184	.1	78	1
R L12+00S 4+00E	110	11	110	.1	107	1
R L12+00S 4+50E	84	8	96	.1	94	1
R L12+00S 5+00E	90	9	257	.3	85	1
R L12+00S 5+50E	85	7	156	.2	53	1
R L12+00S 6+00E	91	20	93	.1	40	1
R L12+00S 6+50E	93	7	151	.2	57	1
R L12+00S 7+00E	50	11	120	.1	62	2
R L12+00S 7+50E	130	11	134	.2	67	1
STD C/AU-S	62	39	138	7.1	68	47

SAMPLE#	Cu PPM	Pb PPM	Zn PPM	Ag PPM	Ni PPM	Au* PPB
R L12+00S 8+00E	92	5	187	.1	37	1
R L13+00S 1+00E	74	6	146	.1	29	2
R L13+00S 1+50E	44	6	95	.1	43	73
R L13+00S 2+00E	64	9	207	.2	57	3
R L13+00S 2+50E	64	8	337	.1	67	1
R L13+00S 3+00E	66	2	122	.1	56	2
R L13+00S 3+50E	71	14	135	.1	73	5
R L13+00S 4+00E	58	6	125	.1	47	2
R L13+00S 5+00E	36	3	108	.1	37	3
R L13+00S 5+50E	47	8	97	.1	87	6
R L13+00S 6+00E	352	15	260	.4	74	6
R L13+00S 6+50E	39	2	19	.1	4	2
R L13+00S 7+00E	137	14	131	.1	66	2
R L13+00S 8+00E	132	11	125	.2	58	1
R L14+00S 7+50W	97	7	225	.3	46	3
R L15+00S 8+00W	158	12	125	.1	30	1
R L15+00S 2+50W	339	15	118	.1	31	36
R L17+00S 7+50W	67	15	229	.3	40	1
R L17+00S 1+00W	29	7	113	.1	32	24
R L17+00S 0+50E	15	7	247	.1	33	1
R L17+00S 1+00E	21	8	99	.1	38	1
R L17+00S 1+50E	32	5	107	.1	37	9
R L17+00S 2+00E	37	8	306	.2	45	18
R L17+00S 2+50E	53	4	225	.2	48	2
R L17+00S 3+00E	73	9	76	.2	53	2
R L17+00S 4+00E	115	9	189	.2	73	1
R L17+00S 4+50E	67	11	295	.1	88	1
R L17+00S 5+00E	13	6	50	.1	18	1
R L17+00S 5+50E	25	8	98	.1	28	2
R L17+00S 7+00E	479	19	148	.5	32	3
R L17+00S 7+50E	95	11	87	.1	29	1
STD C/AU-S	62	40	137	7.2	68	52

ACME ANALYTICAL LABORATORIES LTD.
852 E.HASTINGS ST.VANCOUVER B.C. V6A 1R6
PHONE 253-3158 DATA LINE 251-1011

DATE RECEIVED: NOV 7 1986

DATE REPORT MAILED: Nov. 13/86...

GEOCHEMICAL ICP ANALYSIS

.500 GRAM SAMPLE IS DIGESTED WITH 3ML 3-1-2 HCL-HNO3-H2O AT 95 DEG. C FOR ONE HOUR AND IS DILUTED TO 10 ML WITH WATER.
THIS LEACH IS PARTIAL FOR MN.FE.CA.P.CR.MG.BA.TI.B.AL.NA.K.W.SI.ZR.CE.SN.Y.NB AND TA. AU DETECTION LIMIT BY ICP IS 3 PPM.
- SAMPLE TYPE: SOILS -80 MESH AU* ANALYSIS BY AA FROM 10 GRAM SAMPLE.

ASSAYER: D. Toye DEAN TOYE. CERTIFIED B.C. ASSAYER.

STRATO GEOLOGICAL PROJECT-RABBITT CLAIM FILE # 86-3603 PAGE 1

SAMPLE#	Cu PPM	Pb PPM	Zn PPM	Ag PPM	Ni PPM	Au* PPB
R L0+50N 6+00W	87	9	90	.2	37	1
R L0+50N 5+50W	67	8	132	.1	20	1
R L0+50N 5+00W	76	11	92	.2	19	3
R L0+50N 4+50W	71	5	96	.2	16	8
R L0+50N 4+00W	62	6	108	.3	19	4
R L0+50N 3+50W	42	10	77	.1	17	1
R L0+50N 3+00W	99	7	125	.2	21	2
R L0+50N 2+50W	60	4	114	.2	14	3
R L0+50N 2+00W	64	5	98	.1	15	4
R L0+50N 1+50W	54	6	91	.1	20	3
R L0+50N 1+00W	289	12	106	.6	17	2550
R L0+50N 0+50W	38	11	90	.1	21	3
R L0+50N 0+00BL	349	80	281	4.9	41	15100
R L0+00S 6+00W	74	4	119	.1	19	8
R L0+00S 5+50W	71	10	136	.1	18	5
R L0+00S 5+00W	80	10	104	.3	18	1
R L0+00S 4+50W	59	7	104	.2	18	6
R L0+00S 4+00W	46	6	143	.1	14	3
R L0+00S 3+50W	54	7	86	.3	18	4
R L0+00S 3+00W	78	7	107	.2	14	1
R L0+00S 2+50W	6	7	80	.2	6	3
R L0+00S 2+00W	17	9	121	.1	12	4
R L0+00S 1+50W	24	6	134	.2	18	102
R L0+00S 1+00W	60	4	100	.1	15	62
R L0+00S 0+50W	39	4	144	.1	20	13
R L0+00S 0+00BL	114	6	119	.1	30	33
R L0+50S 6+00W	69	2	106	.1	16	1
R L0+50S 5+50W	56	5	127	.2	18	1
R L0+50S 5+00W	50	5	113	.1	16	2
R L0+50S 4+50W	58	4	121	.2	19	1
R L0+50S 4+00W	30	4	122	.2	15	1
R L0+50S 3+50W	43	5	123	.2	14	4
R L0+50S 3+00W	34	11	160	.1	15	21
R L0+50S 2+50W	58	3	105	.1	21	6
R L0+50S 2+00W	52	7	95	.1	19	23
R L0+50S 1+50W	24	5	92	.1	20	175
STD C/AU-S	58	38	130	6.9	68	52

SAMPLE#	Cu PPM	Pb PPM	Zn PPM	Ag PPM	Ni PPM	Au* PPB
R L0+50S 1+00W	57	9	83	.3	13	26
R L0+50S 0+50W	25	6	102	.1	15	53
R L0+50S 0+00BL	43	10	113	.5	44	3
R L1+00S 6+00W	93	8	116	.3	20	1
R L1+00S 5+50W	36	10	164	.3	20	1
R L1+00S 5+00W	39	10	120	.1	16	1
R L1+00S 4+50W	36	12	207	.5	16	34
R L1+00S 4+00W	31	14	127	.1	16	1
R L1+00S 3+50W	74	7	166	.6	18	3
R L1+00S 3+00W	27	11	107	.1	17	1
R L1+00S 2+50W	40	9	101	.3	20	2
R L1+00S 2+00W	27	10	122	.2	19	6
R L1+00S 1+50W	30	8	111	.1	19	1
R L1+00S 1+00W	52	6	98	.2	28	1
R L1+00S 0+50W	46	7	101	.2	16	1
R L1+00S 0+00BL	35	8	95	.2	18	1
R L1+50S 6+00W	58	8	109	.2	18	1
R L1+50S 5+50W	81	9	113	.1	21	1
R L1+50S 5+00W	36	7	117	.1	15	2
R L1+50S 4+00W	39	7	163	.3	15	3
R L1+50S 3+50W	94	9	108	.1	18	1
R L2+00S 6+00W	70	6	97	.1	16	1
R L2+00S 5+50W	73	7	124	.2	20	3
R L2+00S 5+00W	31	7	122	.3	14	1
R L2+00S 4+50W	47	4	147	.1	17	1
R L2+00S 4+00W	34	5	133	.2	14	4
R L2+00S 3+50W	136	6	134	.3	18	19
R L2+50S 6+00W	47	6	68	.1	13	1
R L2+50S 5+50W	40	7	224	.1	16	1
R L2+50S 5+00W	33	10	212	.1	13	1
R L2+50S 4+50W	74	6	107	.2	18	1
R L2+50S 4+00W	47	8	91	.2	21	2
R L2+50S 3+50W	34	9	136	.1	15	1
R L3+00S 6+00W	90	9	194	.5	20	1
R L3+00S 5+50W	80	8	168	.1	17	1
R L3+00S 5+00W	45	7	123	.4	13	1
STD C/AU-S	59	36	137	7.0	69	52

SAMPLE#	Cu PPM	Pb PPM	Zn PPM	Ag PPM	Ni PPM	Au* PPB
R L3+00S 4+50W	19	9	82	.3	6	1
R L3+00S 4+00W	26	11	102	.4	13	12
R L3+00S 3+50W	42	12	157	.3	17	2
R L3+00S 3+00W	45	9	154	.3	10	1
R L3+00S 2+50W	29	12	104	.3	16	1
R L3+00S 2+00W	39	10	125	.2	19	8
R L3+00S 1+75W	78	13	118	.4	34	1
R L3+00S 1+50W	44	7	129	.4	21	1
R L3+00S 1+00W	72	13	125	.4	35	36
R L3+00S 0+50W	38	10	107	.3	27	5
R L3+50S 6+00W	44	12	122	.5	13	2
R L3+50S 5+50W	70	14	153	.4	23	3
R L3+50S 5+00W	55	9	95	.3	20	2
R L3+50S 4+50W	37	11	118	.4	16	1
R L3+50S 4+00W	58	9	101	.3	19	6
R L3+50S 3+50W	54	11	115	.2	18	2
R L3+50S 3+00W	197	11	117	.8	23	1
R L3+50S 2+50W	36	7	91	.2	14	1
R L3+50S 2+00W	43	12	132	.3	32	1
R L3+50S 1+50W	36	8	131	.4	24	1
R L3+50S 1+00W	61	9	124	.3	30	1
R L3+50S 0+50W	34	11	127	.4	22	2
R L3+50S 0+00BL	32	11	125	.3	20	1
R L4+00S 5+50W	63	12	105	.3	19	2
R L4+00S 5+00W	54	7	121	.3	18	2
R L4+00S 4+50W	71	10	123	.3	36	2
R L4+00S 4+00W	64	10	137	.4	19	1
R L4+00S 3+50W	52	10	176	.8	19	1
R L4+00S 3+00W	55	6	115	.4	15	1
R L4+00S 2+50W	40	10	171	.3	24	1
R L4+00S 2+00W	55	10	126	.2	29	1
R L4+00S 1+50W	38	8	176	.2	22	2
R L4+00S 1+00W	50	13	104	.3	20	1
R L4+00S 0+50W	34	6	144	.4	26	3
R L4+00S 0+00BL	32	14	142	.2	20	1
R L4+50S 6+50W	44	8	223	.2	35	1
STD C/AU-S	59	39	135	7.0	68	52

SAMPLE#	Cu PPM	Pb PPM	Zn PPM	Ag PPM	Ni PPM	Au* PPB
R L4+50S 5+50W	61	7	138	.1	19	1
R L4+50S 5+00W	56	9	170	.1	18	4
R L4+50S 4+50W	62	8	123	.1	22	1
R L4+50S 4+00W	43	7	142	.1	21	1
R L4+50S 3+50W	58	7	107	.1	18	1
R L4+50S 3+00W	57	10	122	.1	21	1
R L4+50S 2+50W	62	9	105	.1	22	108
R L4+50S 2+00W	46	10	91	.1	27	26
R L4+50S 1+50W	38	9	105	.1	23	1
R L4+50S 1+00W	42	8	138	.3	36	12
R L4+50S 0+50W	35	7	123	.1	16	1
R L4+50S 0+00BL	45	13	107	.1	36	1
R L5+00S 6+00W	16	9	601	.1	26	1
R L5+00S 5+50W	69	6	111	.1	23	1
R L5+00S 5+00W	89	6	121	.1	24	1
R L5+00S 4+50W	47	6	127	.1	24	2
R L5+00S 4+00W	66	13	160	.1	17	1
R L5+00S 3+50W	32	9	125	.3	15	2
R L5+00S 3+00W	72	8	113	.2	26	7
R L5+00S 2+50W	39	8	118	.1	19	1
R L5+00S 2+00W	56	9	83	.2	22	1
R L5+00S 1+50W	62	12	108	.1	24	4
R L5+00S 1+00W	24	6	107	.1	19	1
R L5+00S 0+50W	41	9	99	.1	27	1
R L5+00S 0+00BL	59	3	123	.2	65	1
R L5+50S 6+00W	67	7	418	.1	36	1
R L5+50S 5+50W	94	10	117	.1	23	2
R L5+50S 5+00W	73	5	111	.1	25	12
R L5+50S 4+50W	90	10	118	.1	28	1
R L5+50S 4+00W	73	11	115	.2	19	58
R L5+50S 3+50W	139	8	108	.3	24	1
R L5+50S 3+00W	65	10	110	.1	24	3
R L5+50S 2+50W	34	10	170	.1	21	1
R L5+50S 2+00W	47	9	102	.1	23	850
R L5+50S 1+50W	61	8	112	.1	31	11
R L5+50S 1+00W	35	9	147	.2	23	9
STD C/AU-S	58	40	135	6.9	69	51

SAMPLE#	Cu PPM	Pb PPM	Zn PPM	Ag PPM	Ni PPM	Au* PPB
R L5+50S 0+50W	36	5	130	.1	24	1
R L5+50S 0+00BL	52	7	140	.1	31	6
R L6+00S 1+00W	32	8	137	.3	38	5
R L6+00S 0+50W	47	7	133	.1	21	2
R L6+00S 0+00BL	15	6	176	.2	16	8
R L7+00S 6+00W	63	7	202	.2	24	1
R L7+00S 5+50W	120	8	255	.2	48	15
R L7+00S 5+00W	79	4	100	.1	65	1
R L7+00S 4+50W	63	3	92	.2	40	1
R L7+00S 4+00W	70	8	100	.2	29	11
R L7+00S 3+50W	77	6	134	.1	29	7
R L7+00S 3+00W	65	7	133	.1	24	1
R L7+00S 2+50W	62	4	128	.2	23	4
R L7+00S 2+00W	61	7	67	.1	22	9
R L7+00S 1+50W	51	8	124	.2	31	5
R L7+00S 1+00W	59	12	305	.2	41	7
R L7+00S 0+50W	61	10	116	.1	45	1
R L7+00S 0+00BL	98	5	102	.3	57	1
R L8+00S 6+00W	58	5	96	.1	20	1
R L8+00S 5+50W	46	5	126	.1	32	2
R L8+00S 5+00W	44	3	147	.2	25	1
R L8+00S 4+50W	83	4	119	.3	43	8
R L8+00S 4+00W	110	2	93	.2	39	1
R L8+00S 3+50W	53	9	134	.3	60	2
R L8+00S 3+00W	78	6	90	.2	54	11
R L8+00S 2+50W	74	6	160	.2	25	3
R L8+00S 2+00W	35	5	99	.1	18	1
R L8+00S 1+50W	44	5	160	.1	28	1
R L8+00S 1+00W	93	8	78	.2	21	35
R L8+00S 0+50W	83	13	138	.4	57	10
R L8+00S 0+00W	93	7	104	.1	40	4
R L9+00S 8+00W	114	8	166	.2	32	1
R L9+00S 7+50W	65	5	98	.2	24	1
R L9+00S 7+00W	96	6	159	.1	31	2
R L9+00S 6+50W	124	4	164	.2	31	12
R L9+00S 6+00W	66	5	223	.3	34	4
STD C/AU-S	56	39	136	7.0	68	50

SAMPLE#	Cu PPM	Pb PPM	Zn PPM	Ag PPM	Ni PPM	Au* PPB
R L9+00S 5+50W	54	5	208	.2	28	3
R L9+00S 5+00W	74	7	151	.1	32	8
R L9+00S 4+50W	153	8	73	.2	99	3
R L9+00S 4+00W	43	6	79	.2	96	1
R L9+00S 3+50W	572	5	124	.3	126	3
R L9+00S 3+00W	302	6	82	.2	111	1
R L9+00S 2+50W	104	8	158	.1	46	4
R L9+00S 2+00W	52	5	82	.1	55	1
R L9+00S 1+50W	77	6	105	.1	45	2
R L9+00S 1+00W	78	9	158	.2	34	7
R L9+00S 0+50W	90	22	295	.2	52	29
R L9+00S 0+00BL	120	10	115	.2	33	1
R L10+00S 8+00W	113	9	119	.1	37	3
R L10+00S 7+50W	78	12	140	.2	27	20
R L10+00S 7+00W	106	10	196	.1	41	4
R L10+00S 6+50W	72	7	118	.2	34	3
R L10+00S 6+00W	102	4	140	.2	27	1
R L10+00S 5+50W	105	9	144	.3	35	5
R L10+00S 5+00W	76	3	142	.2	23	1
R L10+00S 4+50W	58	6	87	.1	35	33
R L10+00S 4+00W	96	11	117	.3	39	1
R L10+00S 3+50W	40	10	168	.1	36	1
R L10+00S 3+00W	78	9	130	.1	58	1
R L10+00S 2+50W	45	4	59	.1	76	1
R L10+00S 2+00W	66	9	164	.1	71	1
R L10+00S 1+50W	109	8	137	.1	61	1
R L10+00S 1+00W	115	10	159	.2	41	1
R L10+00S 0+50W	54	7	168	.3	49	1
R L10+00S 0+00W	193	6	149	.2	30	11
R L11+00S 8+00W	387	11	122	.2	39	1
R L11+00S 7+50W	190	12	123	.1	32	1
R L11+00S 7+00W	358	11	173	.2	37	301
R L11+00S 6+50W	67	12	144	.3	30	6
R L11+00S 6+00W	48	6	201	.1	28	1
R L11+00S 5+50W	83	9	138	.1	27	2
R L11+00S 5+00W	115	9	82	.1	30	2
STD C/AU-S	57	37	127	6.9	64	53

SAMPLE#	Cu PPM	Pb PPM	Zn PPM	Ag PPM	Ni PPM	Au* PPB
R L11+00S 4+50W	71	4	70	.1	41	1
R L11+00S 4+00W	185	9	150	.1	23	4
R L11+00S 3+50W	52	6	116	.1	33	73
R L11+00S 3+00W	107	8	164	.1	22	8
R L11+00S 2+50W	182	8	217	.2	113	1
R L11+00S 2+00W	78	9	141	.2	29	2
R L11+00S 1+50W	84	8	108	.2	45	1
R L11+00S 1+00W	87	9	130	.1	34	1
R L11+00S 0+50W	211	9	124	.1	39	9
R L11+00S 0+00BL	67	12	239	.2	23	5
R L12+00S 8+00W	75	11	187	.1	53	4
R L12+00S 7+50W	35	8	103	.4	24	1
R L12+00S 7+00W	154	8	177	.1	32	1
R L12+00S 6+50W	64	6	234	.1	32	2
R L12+00S 6+00W	105	12	197	.1	48	1
R L12+00S 5+50W	101	9	137	.1	33	1
R L12+00S 5+00W	45	10	126	.1	21	2
R L12+00S 4+50W	138	13	138	.1	29	10
R L12+00S 4+00W	164	4	98	.1	23	1
R L12+00S 3+50W	261	4	105	.2	18	8
R L12+00S 3+00W	215	8	122	.1	19	28
R L12+00S 2+50W	200	4	67	.4	98	1
R L12+00S 2+00W	76	7	138	.1	35	390
R L12+00S 1+50W	60	3	96	.2	40	5
R L12+00S 1+00W	85	8	121	.1	47	40
R L12+00S 0+50W	103	4	111	.1	25	11
R L13+00S 8+00W	270	8	141	.1	40	1
R L13+00S 7+50W	325	13	169	.2	31	14
R L13+00S 7+00W	197	11	155	.1	41	1
R L13+00S 6+50W	112	12	129	.1	52	1
R L13+00S 5+50W	144	11	99	.2	41	4
R L13+00S 5+00W	88	12	162	.1	29	5
R L13+00S 4+50W	86	10	172	.3	27	1
R L13+00S 4+00W	128	11	117	.1	30	2
R L13+00S 3+50W	152	5	103	.1	22	4
R L13+00S 3+00W	60	2	60	.1	31	3
STD C/AU-S	59	36	137	6.9	68	52

SAMPLE#	Cu PPM	Pb PPM	Zn PPM	Ag PPM	Ni PPM	Au* PPB
R L13+00S 2+50W	84	8	150	.1	30	1
R L13+00S 1+50W	78	14	140	.1	16	24
R L13+00S 1+00W	102	8	133	.1	25	121
R L13+00S 0+50W	49	8	118	.1	29	3
R L13+00S 0+00BL	66	9	128	.1	33	5
R L14+00S 7+50W	115	13	295	.2	56	1
R L14+00S 2+50W	342	9	121	.2	24	2
R L14+00S 2+00W	220	10	169	.1	23	1
R L14+00S 1+50W	121	13	138	.1	35	2
R L14+00S 1+00W	70	11	98	.1	25	27
R L14+00S 0+50W	64	5	128	.1	41	7
R L14+00S 0+00BL	64	5	119	.1	38	1
R L16+00S 7+50W	61	11	123	.1	63	1
R L16+00S 6+50W	312	11	218	.1	39	6
R L16+00S 5+50W	113	18	115	.2	24	4
R L16+00S 5+00W	129	10	143	.2	48	7
R L16+00S 4+50W	114	12	116	.1	24	18
R L16+00S 3+50W	117	9	112	.3	32	10
R L16+00S 2+50W	340	10	126	.3	27	3
R L16+00S 2+00W	218	10	164	.1	30	13
R L17+00S 8+00W	76	9	111	.1	71	1
R L17+00S 6+00W	54	9	142	.1	27	1
R L17+00S 5+50W	68	8	323	.1	38	4
R L17+00S 4+50W	106	12	129	.1	20	16
R L17+00S 4+00W	139	4	263	.5	30	131
R L17+00S 3+50W	70	12	79	.1	38	12
R L17+00S 3+00W	49	3	14	.2	3	1
R L17+00S 2+50W	123	17	130	.1	24	30
R L17+00S 2+00W	168	14	70	.1	24	4
R L17+00S 1+50W	26	4	55	.1	28	1
R L17+00S 1+00W	108	2	99	.1	21	3
R L17+00S 0+50W	54	7	132	.4	30	2
R L17+00S 0+00BL	26	5	116	.1	49	1
STD C/AU-S	57	39	133	7.0	70	52

ACME ANALYTICAL LABORATORIES LTD.
852 E.HASTINGS ST.VANCOUVER B.C. V6A 1R6
PHONE 253-3158 DATA LINE 251-1011

DATE RECEIVED: OCT 21 1986

DATE REPORT MAILED: Oct 27/86

GEOCHEMICAL ICP ANALYSIS

.500 GRAM SAMPLE IS DIGESTED WITH 3ML 3-1-2 HCL-HNO3-H2O AT 95 DEG. C FOR ONE HOUR AND IS DILUTED TO 10 ML WITH WATER.
THIS LEACH IS PARTIAL FOR MN.FE.CA.P.CR.MG.BA.TI.B.AL.NA.K.W.SI.ZR.CE.SN.Y.NB AND TA. AU DETECTION LIMIT BY ICP IS 3 PPM.
- SAMPLE TYPE: SOILS -80MESH AU* ANALYSIS BY AA FROM 10 GRAM SAMPLE.

ASSAYER: D. Toye. DEAN TOYE. CERTIFIED B.C. ASSAYER.

STRATO GEOLOGICAL PROJECT-RABBITT-R FILE#86-3317 PAGE 1

SAMPLE#	Cu PPM	Pb PPM	Zn PPM	Ag PPM	Ni PPM	Au* PPB
R 0+75S 2+25E	28	10	148	.4	55	4
R 0+75S 2+50E	20	4	97	.4	35	2
R 0+75S 2+75E	18	10	140	.3	33	1
R 0+75S 3+00E	18	8	161	.2	25	3
R 1+00S 2+25E	50	8	125	.2	48	8
R 1+00S 2+50E	39	8	140	.3	50	4
R 1+00S 2+75E	32	10	128	.3	44	1
R 1+00S 3+00E	24	8	176	.2	45	4
R 1+50S 2+25E	37	14	129	.2	34	3
R 1+50S 2+50E	27	6	98	.2	42	4
R 1+50S 2+75E	34	9	130	.2	28	3
R 1+50S 3+00E	64	9	149	.3	95	132
R 1+50S 3+25E	36	11	112	.2	32	6
R 1+50S 3+50E	65	16	118	.5	37	1
R 2+00S 2+75E	49	6	152	.4	62	1
R 2+00S 3+00E	64	10	150	.3	92	175
R 2+00S 3+25E	41	10	118	.1	30	7
R 2+00S 3+50E	42	9	74	.3	23	1
R 2+00S 3+75E	22	12	163	.1	19	1
R 2+25S 3+00E	59	12	118	.4	34	1
R 2+25S 3+25E	25	10	129	.2	27	1
R 2+25S 3+50E	57	10	105	.4	32	1
R 2+25S 3+75E	20	12	164	.1	21	1
STD C/AU-S	57	40	130	6.9	66	53

ACME ANALYTICAL LABORATORIES LTD.
852 E.HASTINGS ST.VANCOUVER B.C. V6A 1R6
PHONE 253-3158 DATA LINE 251-1011

DATE RECEIVED: OCT 31 1986

DATE REPORT MAILED: Nov. 6/86

GEOCHEMICAL ICP ANALYSIS

.500 GRAM SAMPLE IS DIGESTED WITH 3ML 3-1-2 HCL-HNO3-H2O AT 95 DEG. C FOR ONE HOUR AND IS DILUTED TO 10 ML WITH WATER.
THIS LEACH IS PARTIAL FOR MN.FE.CA.P.CR.MG.BA.TI.B.AL.NA.K.W.SI.ZR.CE.SN.Y.NB AND TA. AU DETECTION LIMIT BY ICP IS 3 PPM.
- SAMPLE TYPE: SOILS -80MESH AU* ANALYSIS BY AA FROM 10 GRAM SAMPLE.

ASSAYER: ..D. Toye..DEAN TOYE. CERTIFIED B.C. ASSAYER.

STRATO GEOLOGICAL PROJECT-RABBIT CLAIM FILE# 86-3492 PAGE 1

SAMPLE#	Cu PPM	Pb PPM	Zn PPM	Ag PPM	As PPM	Au* PPB
R L1S 4+25E	54	17	113	.2	4	1
R L1S 4+50E	25	13	134	.1	2	1
R L1S 4+75E	22	13	150	.1	3	2
R L1+50S 3+25W	53	11	129	.1	4	1
R L1+50S 3+00W	39	10	87	.1	2	9
R L1+50S 2+75W	66	13	125	.2	2	2
R L1+50S 2+50W	45	6	96	.1	2	1
R L1+50S 2+25W	78	10	113	.1	6	50
R L1+50S 2+00W	29	6	132	.2	2	23
R L1+50S 1+75W	44	10	233	.2	4	2
R L1+50S 1+50W	40	10	173	.2	3	1
R L1+50S 1+00W	155	10	107	.1	7	4
R L1+50S 0+50W	25	9	85	.2	5	3
R L1+50S 0+00W	33	8	109	.2	2	2
R L1+50S 4+50E	39	10	77	.3	2	6
R L1+50S 4+75E	30	10	89	.1	2	5
R L1+50S 5+00E	29	4	80	.1	5	9
R L2S 3+25W	33	10	143	.1	5	1
R L2S 3+00W	58	8	120	.2	8	2
R L2S 2+75W	56	8	105	.1	8	36
R L2S 2+50W	33	10	129	.2	3	1
R L2S 2+00W	45	7	143	.2	5	27
R L2S 1+75W	48	9	150	.2	7	3
R L2S 1+50W	53	6	128	.1	10	1
R L2S 1+00W	28	10	143	.1	7	13
R L2S 0+50W	42	9	92	.2	5	34
R L2S 0+00W	45	7	125	.2	7	27
R L2S 4+75E	33	8	119	.1	3	1
R L2S 5+00E	37	9	107	.1	9	4
R L2S 5+25E	49	12	105	.2	6	2
R L2+50S 3+25W	33	8	134	.2	3	1
R L2+50S 3+00W	27	6	201	.3	4	3
R L2+50S 2+75W	54	7	100	.2	6	5
R L2+50S 2+50W	33	7	133	.2	2	8
R L2+50S 2+25W	46	8	117	.2	5	5
R L2+50S 2+00W	41	5	127	.2	2	10
STD C/AU-S	58	37	133	7.1	36	50

SAMPLE#	Cu PPM	Pb PPM	Zn PPM	Ag PPM	As PPM	Au* PPB
R L2+50S 1+75W	50	12	123	.2	4	17
R L2+50S 1+50W	29	13	172	.3	5	1
R L2+50S 1+00W	48	14	131	.2	8	2
R L2+50S 0+50W	37	11	130	.3	4	205
R L2+50S 0+00S	51	12	110	.2	8	4
STD C/AU-S	57	40	130	7.1	42	52

ACME ANALYTICAL LABORATORIES LTD.
852 E. HASTINGS, VANCOUVER B.C.
PH: (604)253-3158 COMPUTER LINE: 251-1011

DATE RECEIVED JAN 6 1987

DATE REPORTS MAILED Jan 21/87

GEOCHEMICAL ASSAY CERTIFICATE

SAMPLE TYPE : PULP
Au* - 10 GM.IGNITED. HOT AQUA REGIA LEACHED. MIBK EXTRACTION. AA ANALYSIS.

ASSAYER D. Toye DEAN TOYE . CERTIFIED B.C. ASSAYER

STRATO GEOLOGICAL PROJECT RABBITT FILE# 86-3873 R PAGE# 1

SAMPLE	Au* ppb
R LO+50N 0+00E	590

RUN AGAIN FOR CHECK

ACME ANALYTICAL LABORATORIES LTD.
852 E. HASTINGS, VANCOUVER B.C.
PH:(604)253-3158 COMPUTER LINE:251-1011

DATE RECEIVED JAN 6 1987

DATE REPORTS MAILED Jan 21/87

GEOCHEMICAL ASSAY CERTIFICATE

SAMPLE TYPE : PULP
Au* - 10 GM.IGNITED, HOT AQUA REGIA LEACHED, MIBK EXTRACTION, AA ANALYSIS.

ASSAYER: D. Toye DEAN TOYE . CERTIFIED B.C. ASSAYER

STRATO GEOLOGICAL PROJECT RABBITT FILE# 86-3603 R PAGE# 1

SAMPLE	Au* ppb
R L0+50N 1+00W	2860
R L0+50N 0+50W	1
R L0+50N 0+00BL	18300
R L5+50S 3+00W	18
R L5+50S 2+50W	11
R L5+50S 2+00W	76
R L5+50S 1+50W	16
R L11+00S 7+50W	1
R L11+00S 7+00W	92
R L11+00S 6+50W	1
R L12+00S 2+50W	1
R L12+00S 2+00W	65
R L12+00S 1+50W	1

RE-RUN FOR CHECK

ACME ANALYTICAL LABORATORIES LTD.
852 E.HASTINGS ST.VANCOUVER B.C. V6A 1R6
PHONE 253-3158 DATA LINE 251-1011

DATE RECEIVED: NOV 26 1986

DATE REPORT MAILED: Dec.4/86...

GEOCHEMICAL ICP ANALYSIS

.500 GRAM SAMPLE IS DIGESTED WITH 3ML 3-1-2 HCL-HNO3-H2O AT 95 DEG. C FOR ONE HOUR AND IS DILUTED TO 10 ML WITH WATER.
THIS LEACH IS PARTIAL FOR MN.FE.CA.P.CR.MG.BA.TI.B.AL.NA.K.W.SI.ZR.CE.SN.Y.NB AND TA. AU DETECTION LIMIT BY ICP IS 3 PPM.
- SAMPLE TYPE: P1-2 CORES P3-4 ROCKS. AU* ANALYSIS BY AA FROM 10 GRAM SAMPLE.

ASSAYER: .....DEAN TOYE. CERTIFIED B.C. ASSAYER.

STRATO GEOLOGICAL PROJECT - RABBITT CLAIM FILE # 86-3826 PAGE 1

SAMPLE#	Cu PPM	Pb PPM	Zn PPM	Ag PPM	As PPM	Au* PPB
DDH-R1-1	63	9	75	.1	22	210
DDH-R1-2	74	5	65	.3	13	375
DDH-R1-3	50	7	44	.1	13	15
DDH-R1-4	36	4	61	.2	2	42
DDH-R1-5	102	5	68	.1	2	240
DDH-R4-1	38	2	41	.1	10	34
DDH-R4-2	28	9	56	.4	24	88
DDH-R4-3	17	3	47	.1	28	5
DDH-R4-4	55	9	43	.2	15	42
DDH-R4-5	56	4	37	.1	50	7
DDH-R4-6	35	4	45	.1	95	96
DDH-R4-7	10	7	35	.5	53	74
DDH-R4-8	25	6	42	.2	62	98
DDH-R4-9	18	9	41	.4	78	51
DDH-R5-1	51	7	66	.1	6	1
DDH-R5-2	84	11	30	.1	9	52
DDH-R5-3	60	8	59	.3	7	4
DDH-R5-4	29	7	88	.2	97	150
DDH-R5-5	52	6	92	.2	29	54
DDH-R5-6	67	16	89	.7	57	88
DDH-R5-7	34	3	60	.3	36	62
DDH-R5-8	49	7	61	.1	2	2
DDH-R5-9	5	5	29	.1	9	185
DDH-R5-10	52	9	77	.5	105	14
DDH-R5-11	69	11	82	.1	9	25
DDH-R5-12	57	6	94	.6	12	3
DDH-R5-13	56	7	82	.1	3	10
DDH-R5-14	46	11	78	.1	17	7
DDH-R5-15	45	8	123	.5	10	3
DDH-R5-16	74	7	93	.2	26	43
DDH-R6-1	34	5	80	.1	15	5
DDH-R6-2	8	7	21	.4	24	195
DDH-R6-3	14	9	43	.1	36	20
DDH-R6-4	37	18	59	.7	118	68
DDH-R6-5	14	11	54	.4	89	34
DDH-R6-6	13	10	28	.3	21	56
STD C/AU-R	61	40	141	7.3	43	520

SAMPLE#	Cu PPM	Pb PPM	Zn PPM	Ag PPM	As PPM	Au* PPB
DDH-R6-7	18	5	52	.1	13	390
DDH-R6-8	48	9	62	.3	58	37

STRATO GEOLOGICAL PROJECT - RABBITT CLAIM FILE # 86-3826 PAGE 3

SAMPLE#	Cu PPM	Pb PPM	Zn PPM	Ag PPM	As PPM	Au* PPB
1186-R-44	11	14	22	.2	6	122
1186-R-45	73	6	69	.1	18	28
1186-R-46	61	10	182	.3	49	71
1186-R-47	61	2	97	.5	12	7
1186-R-48	28	6	48	.1	23	19
1186-R-49	47	17	87	.2	2	5
1186-R-50	75	2	85	.1	2	2
1186-R-52	69	6	74	.2	90	23
1186-R-53	70	6	73	.1	13	62
1186-R-54	70	2	60	.1	5	2
1186-R-55	67	2	48	.3	2	1
1186-R-56	103	2	60	.1	4	2
1186-R-57	65	2	67	.1	2	6
1186-R-58	66	6	74	.1	2	4
1186-R-59	115	2	72	.1	2	2
1186-R-60	114	2	76	.1	2	2
1186-R-61	93	8	49	.2	17	4
1186-R-62	17	2	25	.1	17	21
1186-R-63	82	5	61	.5	5	2
1186-R-64	60	2	47	.1	3	2
1186-R-65	135	4	45	.2	3	4
1186-R-66	67	6	78	.1	2	3
1186-R-67	95	4	72	.1	2	1
1186-R-68	105	2	53	.1	4	2
1186-R-69	176	3	90	.1	2	1
1186-R-70	53	2	68	.1	2	3
1186-R-71	85	6	53	.2	2	3
1186-R-72	43	4	51	.1	2	1
1186-R-73	67	4	69	.1	3	5
1186-R-74	71	8	163	.2	2	6
1186-R-75	56	10	113	.1	5	3
1186-R-76	60	4	55	.1	2	8
1186-R-77	75	2	43	.2	4	2
1186-R-78	55	3	60	.1	2	5
1186-R-79	52	2	115	.1	4	1
1186-R-80	96	6	134	.4	2	3
STD C/AU-R	58	39	139	6.8	41	510

SAMPLE#	Cu PPM	Pb PPM	Zn PPM	Ag PPM	As PPM	Au* PPB
1186-R-81	60	7	52	.1	2	1
1186-R-82	78	2	43	.1	3	3
1186-R-83	61	4	50	.2	2	1
1186-R-84	58	4	29	.1	6	4
1186-R-85	64	2	48	.1	2	3
1186-R-86	74	10	46	.1	8	1
1186-R-87	57	7	27	.4	8	1
1186-R-88	62	3	48	.1	2	1
1186-R-89	51	2	26	.2	4	1
1186-R-90	72	4	37	.1	2	3
1186-R-91	65	4	23	.2	2	1
1186-R-92	48	2	41	.1	2	2
1186-R-93	63	5	57	.1	2	2
STD C/AU-R	62	37	140	7.2	41	520

ACME ANALYTICAL LABORATORIES LTD.
852 E.HASTINGS ST.VANCOUVER B.C. V6A 1R6
PHONE 253-3158 DATA LINE 251-1011

DATE RECEIVED: DEC 8 1986

DATE REPORT MAILED: Dec.11/86...

GEOCHEMICAL ICP ANALYSIS

.500 GRAM SAMPLE IS DIGESTED WITH 3ML 3-1-2 HCL-HNO3-H2O AT 95 DEG. C FOR ONE HOUR AND IS DILUTED TO 10 ML WITH WATER.
THIS LEACH IS PARTIAL FOR MN.FE.CA.P.CR.MG.BA.TI.B.AL.NA.K.W.SI.ZR.CE.SN.Y.NB AND TA. AU DETECTION LIMIT BY ICP IS 3 PPM.
- SAMPLE TYPE: CORE AU* ANALYSIS BY AA FROM 10 GRAM SAMPLE.

ASSAYER: D. Toye .DEAN TOYE. CERTIFIED B.C. ASSAYER.

STRATO GEOLOGICAL PROJECT - RABBITT FILE # 86-3927 PAGE 1

SAMPLE#	Cu PPM	Ag PPM	Au* PPB
DDH R2-1	85	.1	3
DDH R2-2	26	.1	1
DDH R2-3	69	.1	11
DDH R2-4	82	.2	1
DDH R3-1	45	.1	1
DDH R3-2	43	.1	29
DDH R3-3	59	.4	54
DDH R3-4	16	.1	165
DDH R3-5	61	.1	4
DDH R3-6	24	.1	1
DDH R3-7	30	.1	1
DDH R3-8	16	.1	1
DDH R3-9	24	.1	1
DDH R3-10	26	.1	1
DDH R3-11	36	.1	1
DDH R4-A	65	.1	3
DDH R4-B	68	.1	1
DDH R4-C	24	.1	2
DDH R6-A	63	.1	1
DDH R7-1	51	.1	6
DDH R7-2	71	.2	20
DDH R7-3	45	.1	3
DDH R7-4	74	.1	2
DDH R8-1	55	.1	1
DDH R8-2	59	.2	2
DDH R8-3	67	.5	1
DDH R8-4	37	.4	2
DDH R8-5	28	.1	86
DDH R8-6	78	.2	5
DDH R9-1	121	.3	13
DDH R9-2	31	.1	6
DDH R9-3	108	.1	3
DDH R9-4	112	.1	4
DDH R9-5	144	.6	41
DDH R10-1	50	.2	32
DDH R10-2	103	.1	37
STD C/AU-R	57	6.8	510

SAMPLE#	Cu PPM	Ag PPM	Au* PPB
DDH R10-3	70	.1	1
DDH R10-4	97	.1	1
DDH R11-1	47	.1	51
DDH R11-2	62	.1	9
DDH R11-3	59	.1	31
DDH R11-4	93	.3	22
DDH R11-5	59	.3	6
DDH R11-6	56	.1	21
DDH R11-7	62	.3	7
DDH R11-8	76	.4	15
DDH R11-9	80	.2	22
DDH R11-10	55	.3	1
DDH R11-11	140	.2	1
DDH R11-12	89	.1	3
DDH R11-13	104	.1	1
DDH R11-14	68	.2	1
DDH R11-15	69	.1	3
DDH R12-1	39	.3	3
DDH R12-2	49	.3	1
DDH R12-3	54	.3	1
DDH R12-4	50	.3	1
DDH R12-5	54	.3	1
DDH R12-6	57	.3	2
DDH R12-7	75	.3	1
DDH R12-8	62	.1	1
DDH R12-9	52	.3	1
DDH R12-10	74	.1	2
DDH R12-11	42	.1	2
DDH R12-12	68	.4	4
DDH R12-13	53	.3	2
DDH R12-14	58	.3	1
DDH R12-15	83	.3	1
DDH R12-16	59	.1	1
DDH R12-17	55	.3	1
DDH R12-18	40	.1	1
STD C/AU-R	58	6.7	510

SAMPLE#	Cu PPM	Ag PPM	Au* PPB
UG86-1	43	.1	15
UG86-2	20	.1	1
UG86-3	4	.1	1
UG86-4	8	.1	2
UG86-5	28	.1	1
UG86-6	9	.2	56
UG86-7	11	.1	3
UG86-8	69	.1	2
UG86-9	7	.1	1
UG86-10	7	.1	4
1186R-74	175	.3	1
STD C	58	7.1	-

)CME ANALYTICAL LABORATORIES LTD.
852 E.HASTINGS ST.VANCOUVER B.C. V6A 1R6
PHONE 253-3158 DATA LINE 251-1011

DATE RECEIVED: DEC 16 1986

DATE REPORT MAILED: Dec 19/86..

GEOCHEMICAL ICP ANALYSIS

.500 GRAM SAMPLE IS DIGESTED WITH 3ML 3-1-2 HCL-HNO3-H2O AT 95 DEG. C FOR ONE HOUR AND IS DILUTED TO 10 ML WITH WATER.
THIS LEACH IS PARTIAL FOR MN.FE.CA.P.CR.MG.BA.TI.B.AL.NA.K.W.SI.ZR.CE.SN.Y.NB AND TA. AU DETECTION LIMIT BY ICP IS 3 PPM.
- SAMPLE TYPE: ROCK/CORE AU* ANALYSIS BY AA FROM 10 GRAM SAMPLE.

ASSAYER: D. Toye. DEAN TOYE. CERTIFIED B.C. ASSAYER.

STRATO GEOLOGICAL PROJECT-RABBITT FILE# 86-3992

SAMPLE#	Cu PPM	Ag PPM	Au* PPB
STOPE-1	338	3.3	2710
STOPE-2	55	.3	39
DDH-R14-2	162	.3	89
DDH-R14-3	146	.2	6
DDH-R14-4	62	.1	1
DDH-R14-5	28	.1	17
DDH-R14-6	169	.2	1
DDH-R14-7	169	.3	2
DDH-R14-8	44	.2	2
DDH-R14-9	211	.2	3
DDH-R14-10	69	.2	2
STD C/AU-R	59	6.8	505

ACME ANALYTICAL LABORATORIES LTD.
852 E.HASTINGS ST.VANCOUVER B.C. V6A 1R6
PHONE 253-3158 DATA LINE 251-1011

DATE RECEIVED: DEC 18 1986

DATE REPORT MAILED: Jan 5/86

GEOCHEMICAL ICP ANALYSIS

.500 GRAM SAMPLE IS DIGESTED WITH 3ML 3-1-2 HCL-HNO3-H2O AT 95 DEG. C FOR ONE HOUR AND IS DILUTED TO 10 ML WITH WATER.
THIS LEACH IS PARTIAL FOR MN.FE.CA.P.CR.MG.BA.TI.B.AL.NA.K.W.SI.ZR.CE.SN.Y.NB AND TA. AU DETECTION LIMIT BY ICP IS 3 PPM.
- SAMPLE TYPE: CORE AU* ANALYSIS BY AA FROM 10 GRAM SAMPLE.

ASSAYER: D. Toye DEAN TOYE. CERTIFIED B.C. ASSAYER.

STRATO GEOLOGICAL PROJECT-730 RABBITT FILE# 86-4007 PAGE 1

SAMPLE#	Cu PPM	Ag PPM	Au* PPB
DDH-R13-1	55	.6	1
DDH-R13-2	43	.5	1
DDH-R13-3	56	.5	1
DDH-R13-4	43	.4	1
DDH-R13-5	59	.5	1
DDH-R13-6	55	.4	1
DDH-R13-7	53	.5	2
DDH-R13-8	10	.3	1
DDH-R13-9	44	.3	1
DDH-R13-10	47	.3	1
DDH-R13-11	34	.3	1
DDH-R13-12	57	.2	1
DDH-R13-13	57	.3	1
DDH-R13-14	13	.2	2
DDH-R13-15	49	.4	1
DDH-R13-16	151	.4	1
DDH-R13-17	65	.2	1
DDH-R13-18	62	.3	2
DDH-R13-19	22	.1	1
DDH-R13-20	62	.3	1
DDH-R13-21	54	.4	1
DDH-R13-22	69	.4	1
DDH-R14-1	171	.2	1
DDH-R15-1	180	.2	2
DDH-R15-2	57	.1	1
DDH-R15-3	142	.1	1
DDH-R15-4	110	.3	310
DDH-R15-5	200	.2	2
DDH-R15-6	111	.2	1
STD C/AU-R	58	7.1	500

ACME ANALYTICAL LABORATORIES LTD.
852 E.HASTINGS ST.VANCOUVER B.C. V6A 1R6
PHONE 253-3158 DATA LINE 251-1011

DATE RECEIVED: DEC 23 1986

DATE REPORT MAILED: Jan.7/87...

GEOCHEMICAL ICP ANALYSIS

.500 GRAM SAMPLE IS DIGESTED WITH 3ML 3-1-2 HCL-HNO3-H2O AT 95 DEG. C FOR ONE HOUR AND IS DILUTED TO 10 ML WITH WATER.
THIS LEACH IS PARTIAL FOR MN.FE.CA.P.CR.MG.BA.TI.B.AL.NA.K.W.SI.ZR.CE.SN.Y.NB AND TA. AU DETECTION LIMIT BY ICP IS 3 PPM.
- SAMPLE TYPE: CORE AU* ANALYSIS BY AA FROM 10 GRAM SAMPLE.

ASSAYER: D.Toye. DEAN TOYE. CERTIFIED B.C. ASSAYER.

STRATO GEOLOGICAL PROJECT-RABBITT FILE# 86-4065

SAMPLE#	Cu PPM	Ag PPM	Au* PPB
DDH-R16-1	25	.2	3
DDH-R16-2	113	1.2	5
DDH-R16-3	187	.4	2
DDH-R16-4	25	.1	3
DDH-R16-5	39	.2	4
DDH-R16-6	30	.2	14
DDH-R16-7	125	.4	1
DDH-R16-8	114	.5	1
DDH-R17-1	50	.1	1
DDH-R17-2	15	.1	1
DDH-R17-3	33	.1	4
STD C/AU-R	59	6.9	505

CME ANALYTICAL LABORATORIES LTD.
852 E.HASTINGS ST.VANCOUVER B.C. V6A 1R6
PHONE 253-3158 DATA LINE 251-1011

DATE RECEIVED: NOV 13 1986

DATE REPORT MAILED: Nov 18/86...

GEOCHEMICAL ICP ANALYSIS

.500 GRAM SAMPLE IS DIGESTED WITH 3ML 3-1-2 HCL-HNO3-H2O AT 95 DEG. C FOR ONE HOUR AND IS DILUTED TO 10 ML WITH WATER.
THIS LEACH IS PARTIAL FOR MN.FE.CA.P.CR.MG.BA.TI.B.AL.NA.K.W.SI.ZR.CE.SN.Y.NB AND TA. AU DETECTION LIMIT BY ICP IS 3 PPM.
- SAMPLE TYPE: ROCK CHIPS AU* ANALYSIS BY AA FROM 10 GRAM SAMPLE.

ASSAYER: D. Toye..DEAN TOYE. CERTIFIED B.C. ASSAYER.

STRATO GEOLOGICAL RABBITT CLAIM FILE# 86-3672

SAMPLE#	Cu PPM	Pb PPM	Zn PPM	Ag PPM	Ni PPM	Au* PPB
1186-R-1	88	9	107	.5	33	15
1186-R-2	55	13	77	.1	14	2
1186-R-3	54	9	135	.1	15	1
1186-R-4	81	9	230	.1	41	7
1186-R-5	46	8	61	.1	18	3
1186-R-6	62	7	62	.1	24	4
1186-R-7	90	2	59	.1	31	2
1186-R-8	64	6	95	.1	29	9
1186-R-9	73	6	39	.1	93	1
1186-R-10	33	30	41	.2	10	9
1186-R-11	31	7	91	.2	26	77
1186-R-12	25	8	61	.1	10	490
1186-R-13	69	13	125	.4	25	21
1186-R-14	73	13	205	.1	31	112
1186-R-15	37	11	89	.1	29	26
1186-R-16	12	2	13	.1	4	15
1186-R-17	68	16	67	.1	27	19
1186-R-18	8	2	19	.1	6	17
1186-R-19	17	7	30	.1	10	56
1186-R-20	85	6	43	.4	11	6
1186-R-21	52	3	36	.1	8	3
1186-R-22	99	6	71	.3	6	1
1186-R-23	69	4	29	.1	6	1
1186-R-24	53	8	73	.1	10	1
1186-R-25	84	7	69	.1	7	6
1186-R-26	30	5	32	.1	7	175
1186-R-27	37	4	20	.1	6	1
1186-R-28	93	2	13	.1	5	2
1186-R-29	27	2	13	.1	4	2
1186-R-30	13	6	27	.1	7	5
1186-R-31	5	4	16	.1	6	3
1186-R-32	44	5	43	.1	23	1
1186-R-33	165	780	21	1.8	3	170
1186-R-34	10	2	4	.1	3	49
1186-R-35	10	61	23	2.6	1	2390
1186-R-36	63	5	29	.3	8	2
STD C/AU-R	56	37	131	6.8	64	495

SAMPLE#	Cu PPM	Pb PPM	Zn PPM	Ag PPM	Ni PPM	Au* PPB
1186-R-37	10	2	11	.3	3	29
1186-R-38	28	2	7	.2	3	7
1186-R-39	83	2	75	.1	9	6
1186-R-40	156	4	45	.1	10	3
1186-R-41	4	2	9	.2	3	2
1186-R-42	81	3	46	.1	28	1
1186-R-43	38	8	3	.1	3	1
RA-1	8	2	4	.1	5	1
RA-2	4	2	1	.1	3	2
RA-3	414	2	72	.3	10	1
STD C/AU-R	60	36	128	6.9	65	510

APPENDIX III B

Bulk Sample Concentration Method

and Assay Certificate

SANDO INDUSTRIES LTD.

PRECIOUS METALS REFINERS AND ASSAYERS

Report On Bulk Assay of Ore

File No 10332

Report No

Reported To Strato Geological Engineering Ltd.

3566 King George Highway

Surrey, B.C. V4A 5B6

Attention: Mr. Ralph Englund

Date January 30, 1987

We have completed testing of your bulk sample submitted on December 4, 1986 and report as follows:

Sample Identification:

The sample was labelled "Monica" and weighed 6,640 lbs.

Method of Testing:

The sample was crushed, ball milled, tabled with regrind (to approximately 100 mesh) to recover a "Rough" concentrate. The "Rough" concentrate was further concentrated on "Sando's Finishing Table" to produce a "Super" concentrate, "Super" middlings and "Super" tails.

Results of Testing:

"Rough" Concentrating

Weight of Ore "Heads"	6,640 lbs
Weight of "Rough Conc."	102 lbs
Weight of "Rough Tails"	6,538 lbs

"Super" Concentrating

Weight of Rough Conc. "Heads"	102.0 lbs
Weight of Super Conc.	4.6 lbs
Weight of Super Mids	92.0 lbs
Weight of Super Tails	5.4 lbs

Weight of Gold in Rough Tails	1,219.88	Milligrams
Weight of Gold in Super Conc.	4,858.02	Milligrams
Weight of Gold in Super Mids.	2,617.76	Milligrams
Weight of Gold in Super Tails	28.55	Milligrams

Weight of Gold in Ore Heads = 8,724.21 Milligrams

#6 - 7950 HUSTON ROAD, LADNER, B.C., CANADA V4G 1C2 (604) 946-2266

Assay Results. (Certificate Attached)

Heads	0.085	Troy Ounces Per Ton
Super Conc.	67.922	Troy Ounces Per Ton
Super Middlings	1.830	Troy Ounces Per Ton
Super Tails	0.340	Troy Ounces Per Ton
Rough Tails	0.012	Troy Ounces Per Ton

Fred C. Burgess
Chief Assayer

To:

Strato Geological Engineering Ltd.

3566 King George Highway

Surrey, B.C.

V4A 5B6

Attention:

SANDO INDUSTRIES LTD.
#6 - 7950 HUSTON ROAD,
DELTA, B.C., CANADA V4G 1C2
(604) 946-2266

Certificate of Assay

Date: January 30, 1987

Control No. 10332

We Hereby Certify that the following are the results of assays made by us upon submitted Bulk Ore samples.

Sample Identification	GOLD Ounces Per Ton	SILVER Ounces Per Ton	Percent	Percent	Percent	Percent	Percent	Percent
Heads	0.085							
Super Conc.	67.922							
Super Mids	1.830							
Super Tails	0.34							
Rough Tails	0.012							

Note: Pulps retained three months.

Rejects retained two weeks.

ALL REPORTS ARE THE CONFIDENTIAL PROPERTY OF CLIENTS. PUBLICATION OF STATEMENTS, CONCLUSIONS OR EXTRACTS FROM OR REGARDING OUR REPORTS IS NOT PERMITTED WITHOUT OUR WRITTEN APPROVAL. ANY LIABILITY ATTACHED THERETO IS LIMITED TO THE FEE CHARGED.

SANDO INDUSTRIES LTD.

A. T. Burgess

Certified Provincial Assayer

APPENDIX IV

Histograms and Statistical Data for:

Cu, Pb, Zn, and Ni in Soils

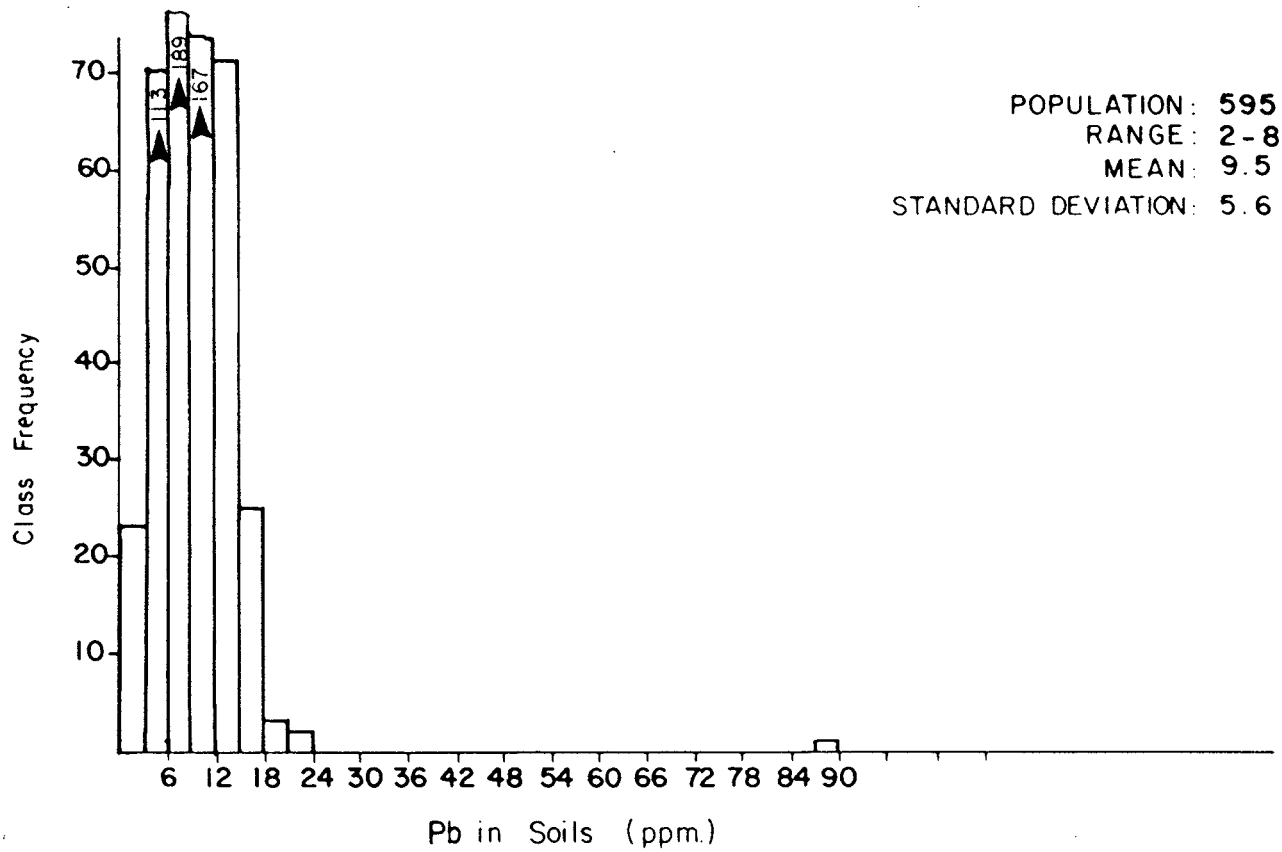

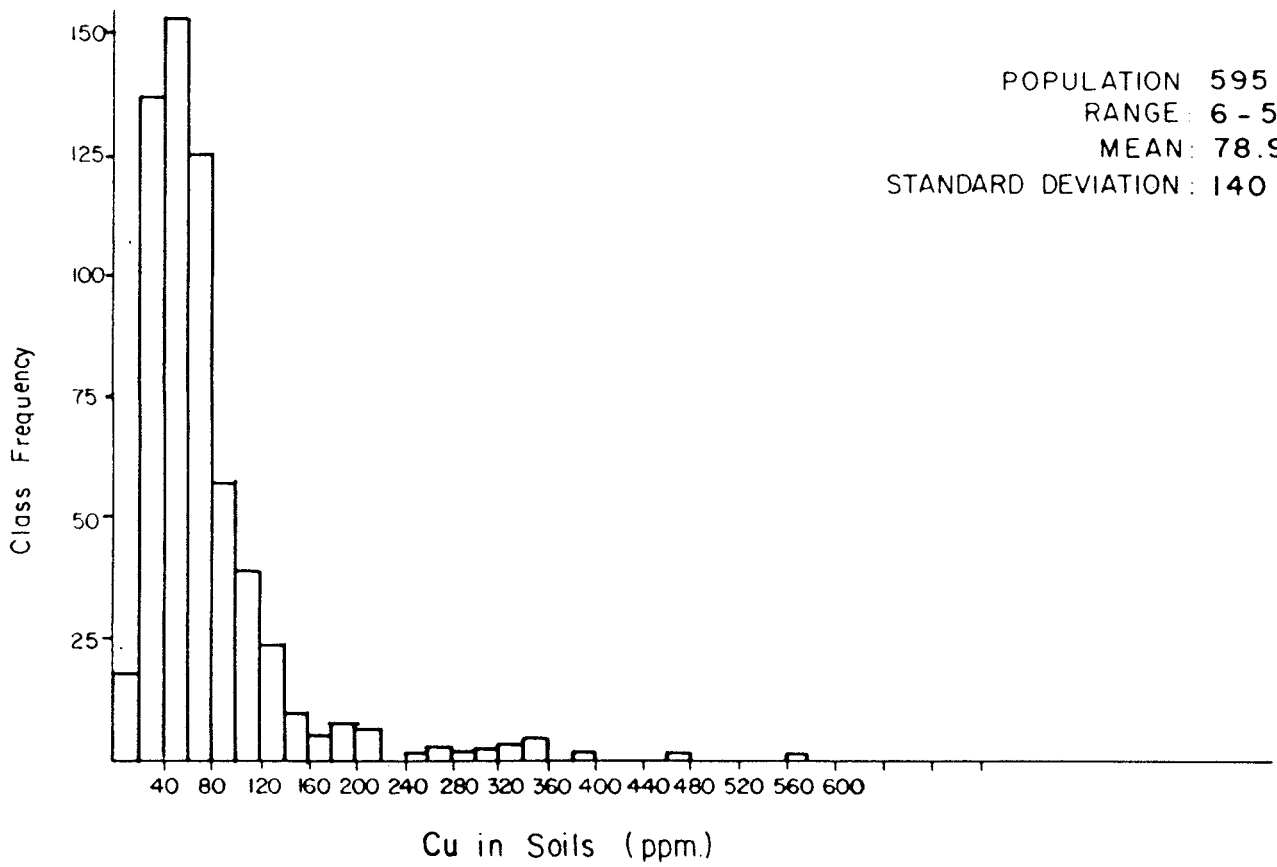

TWIN EAGLE RESOURCES INC.		
GOLD MOUNT CLAIM GROUP		
HISTOGRAMS Pb, Cu (in soils)		
MD Similkameen	NTS 92-H/10W	STRATO GEOLOGICAL ENGINEERING LTD.
DRAWN BY: LC/SW	DATE: Jan. 1987	

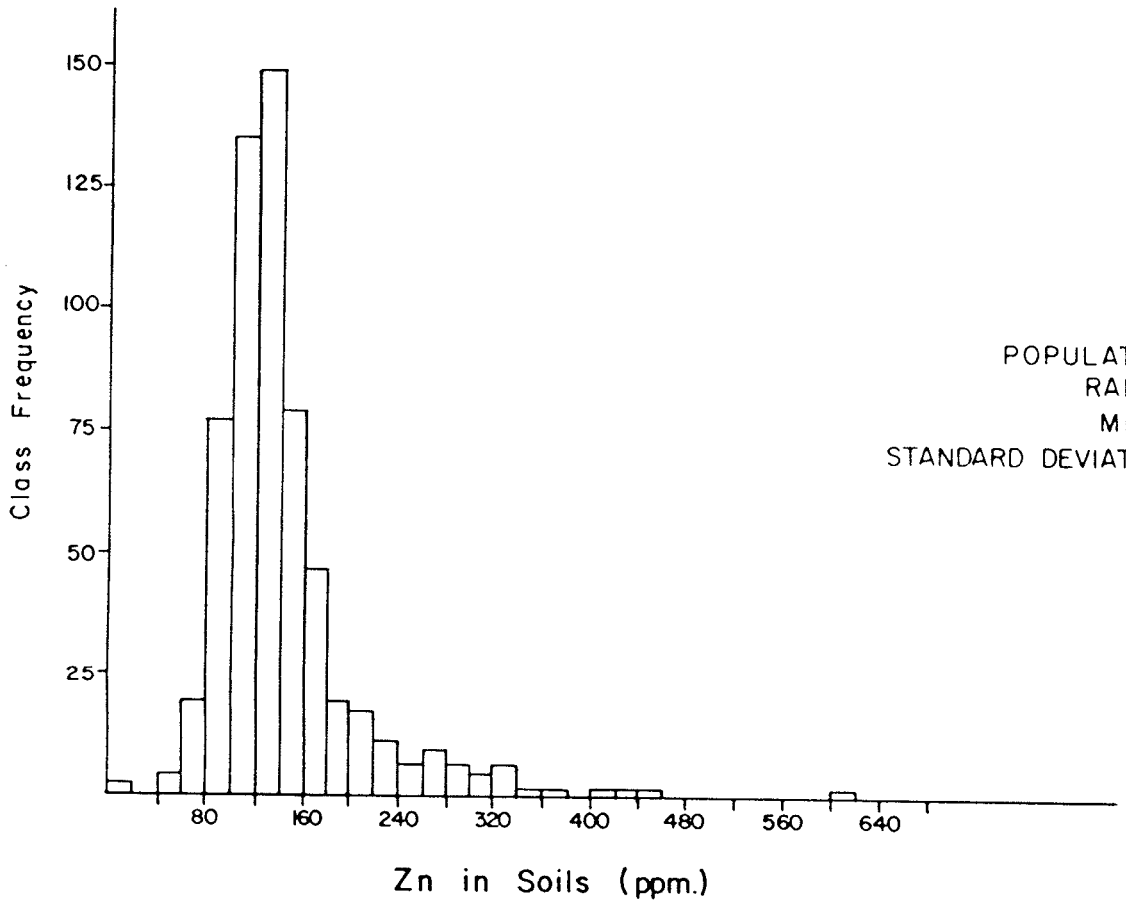

POPULATION: 595
RANGE: 14 - 601 ppm
MEAN: 57.6
STANDARD DEVIATION: 140.8

TWIN EAGLE RESOURCES INC.		
GOLD MOUNT CLAIM GROUP		
HISTOGRAMS Zn — (in soils)		
M.D. Similkameen	NTS 92-H/10W	STRATO GEOLOGICAL ENGINEERING LTD.
DRAWN BY: LC/GT	DATE: Jan. 1987	

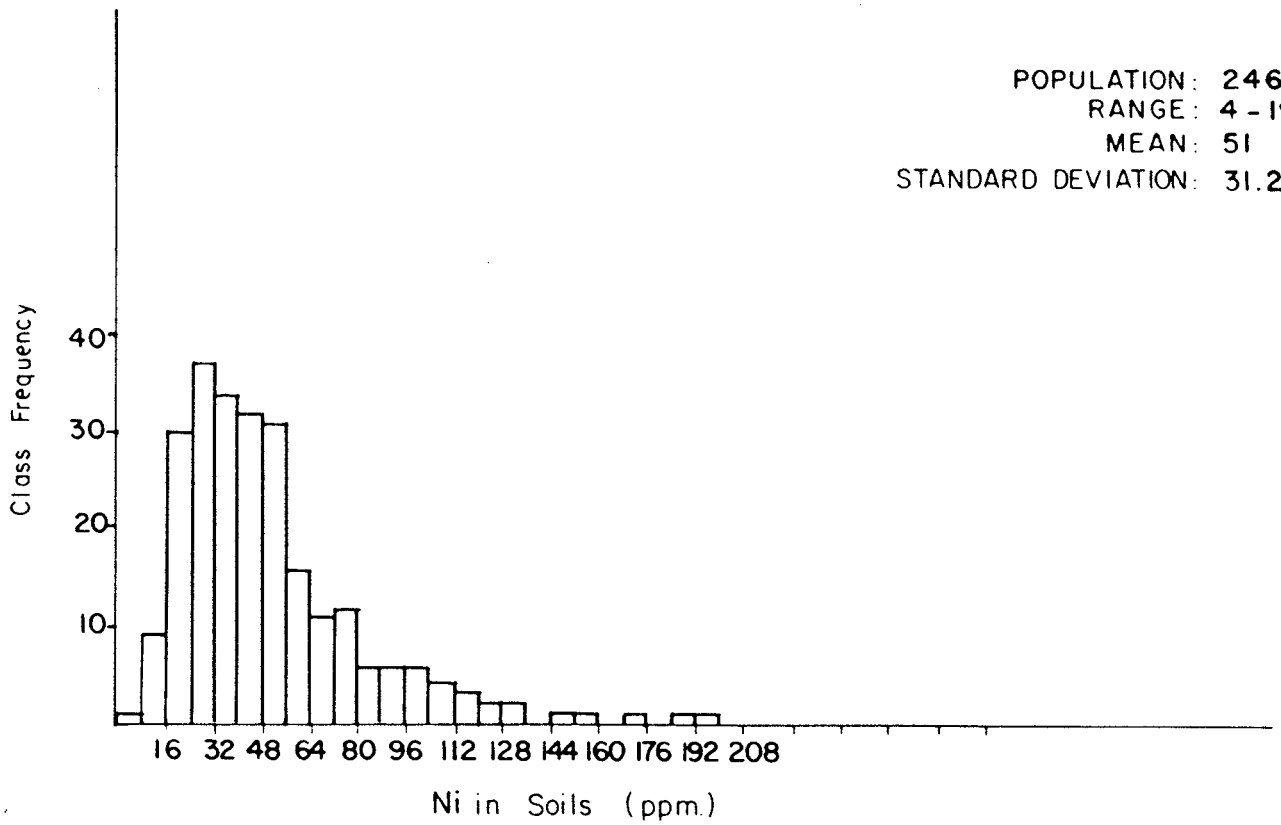

Eastern Grid Lines

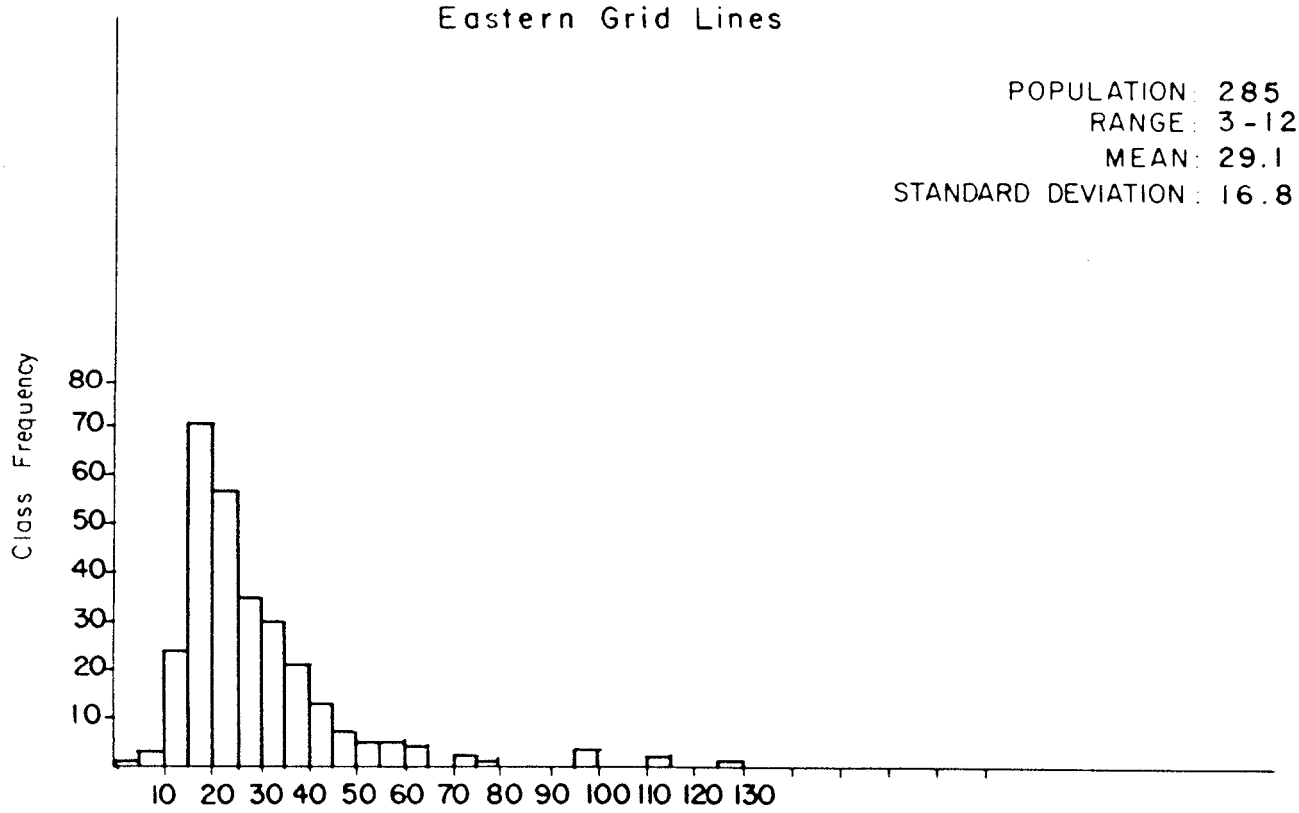

Western Grid Lines

TWIN EAGLE RESOURCES INC.	
GOLD MOUNT CLAIM GROUP	
HISTOGRAMS Ni (in soils)	
MD Similkameen	NTS 92-H/10W
DRAWN BY: LC/SW	DATE: Jan 1987

APPENDIX V

Rock Sample Descriptions

APPENDIX V

ROCK SAMPLE DESCRIPTIONS

UG - 86 - 1

From A-6 + 2.0m, east wall, 80cm channel sample. Contains milky white, medium to coarse grained quartz veinlets and stringers in sheared argillite-andesite. Sample contains 50% clay gouge, 30 to 40% angular argillite and andesite clasts (1.0cm diameter), 10 to 20% quartz and minor fine grained pyrite.

UG - 86 - 2

From A-6 + 0.0m, channel sample on back of adit. Contains white, medium to coarse grained quartz in interbedded andesite-argillite. Sample contains 60% andesite, 30% argillite, 5 to 10% quartz as veinlets and stringers (1cm to 5cm wide). There is locally up to 5% fine grained pyrite.

UG - 86 - 3

From A-5 + 22.0m, 2 to 7cm channel sample. Sample contains white, medium to coarse grained quartz vein with minor fine grained pyrite, minor chlorite and carbonate along fractures. There are a few quartz stringers parallel to the main vein.

UG - 86 - 4

From A-5 + 12.0m, 210cm channel sample. Sample contains 40% milky white, medium to coarse grained quartz veins and stringers, 30% sheared argillite, 25% sheared andesite, 5% clay gouge, minor pyrite, minor limonite and trace graphite.

UG - 86 - 5

From A-5 + 6.0m, 5 to 10cm channel sample. Contains white to clear, medium to very coarse grained quartz vein in andesite with minor parallel quartz stringers. Also contains minor pyrite, minor chlorite, minor calcareous fracture filling and trace limonite.

UG - 86 - 6

From A-4 + 5m, 10 to 15cm channel sample. Sample contains white, medium coarse grained quartz in quartz flooded volcanics with 50% fine grained dissseminated pyrite. Also contains 10% lenses of volcanic with associated chlorite smears and minor calcareous fracture filling.

UG - 86 - 7

From A-3 + 21m, 80cm channel sample. Sample contains dirty white, coarse grained quartz vein in quartz flooded volcanics. There is minor fine grained pyrite disseminations and in discontinuous veinlets. Quartz appears to be thicker at sample location due to faulting. Actual thickness is probably 40 to 50cm.

UG - 86 - 8

From A-3 + 14.5m, 90cm channel sample. Same description as UG-86-7 with minor argillite clasts along margins of vein.

UG - 86 - 9

From A-3 + 12.5m, 40cm channel sample. Sample contains white, medium to very coarse grained, sheared quartz vein with faults on either side of vein. There is minor graphite, chlorite and traces of disseminated pyrite.

UG - 86 - 10

From A-1 + 11m on west wall, 70cm channel sample. Sample contains white, medium to very coarse grained quartz vein in sheared andesite. There is minor fine grained pyrite and abundant calcareous fracture filling. Vein appears to be cut off by vertical fault.

1186 - R - 27

Massive white quartz from a 70cm wide vein; may be the sheared off part of the aforementioned quartz vein. No visible sulphides except minor pyrite (<1%), also abundant limonite.

1186 - R - 28

Small crosscutting massive white quartz vein, minor limonite present.

1186 - R - 29

Massive white quartz with minor limonite and altered volcanics. Same quartz vein as 1186-R-28.

1186 - R - 30

Massive to slightly vuggy white to translucent quartz veins and veinlets brecciating a pyritiferous argillite. Pyrite is coarse grained and makes up less than 5% of rock.

1186 - R - 31

Massive white quartz with brecciated pyritiferous argillite (20% argillite), 10% pyrite in argillite.

1186 - R - 32

Fine grained, buff colored volcanic. Very siliceous, minor quartz stringers, less than 2% pyrite.

1186 - R - 33

Quartz vein. Quartz is massive to euhedral, white to translucent. Found with a calcareous brown limonitic gangue. Contains <1% chalcopyrite and galena as coarse grained disseminations.

1186 - R - 34

Massive white to translucent quartz, some associated minor limonite. No visible sulphides.

1186 - R - 35

Massive white quartz vein 25cm wide (trench). The vein is calcareous and contains trace pyrite. The wall rock consists of altered volcanics containing minor calcite and pyrite. Vein trends 048 + 58 degrees Northwest.

1186 - R - 36

Sample taken of silicified, altered andesitic float boulder 1 meter in diameter. Boulder is angular, deeply weathered, calcareous and contains trace magnetite.

1186 - R - 37

White to translucent coarse grained quartz vein weathered to a rusty-brown color. Vein is greater than 1 meter wide and contains trace pyrite. The wall rock is andesitic and is brecciated at the quartz vein contact. Vein trends approximately 177 + 80 degrees East.

1186 - R - 38

Milky white coarse grained quartz vein 1.2 meters to 1.5 meters wide. Vein is calcareous and contains trace pyrite and abundant limonite. The contact with country rock is uneven but trends approximately 157 + 30 degrees Northeast.

1186 - R - 39

Taken from the hanging wall of vein in 1186-R-38. Hydrothermally altered shale. Shale is slightly fissile and has 5mm to 20mm thick bedding. There is chlorite and limonite along fractures and bedding planes. Bedding planes trend 89 + 22 degrees North.

1186 - R - 40

Taken from footwall of vein in 1186-R-38. Green, very fine grained andesite with trace pyrite and chalcopyrite and minor chlorite. Rock displays crude layering with pyrite rich layers.

1186 - R - 41

Milky white, very coarse grained calcareous quartz vein with trace pyrite and abundant limonite. Country rock is andesitic volcanic.

1186 - R - 42

Dark green, fine grained pyroxenite containing 60% pyroxene, 40% plagioclase; trace pyrite, calcite and magnetite.

1186 - R - 44

Taken from quartz vein in old adit, presently caved in. Sample contains white, very coarse grained quartz, minor fine grained pyrite, abundant graphite and limonite along fractures. Vein is 40 to 50cm wide and trends 162 + 54 degrees Southwest.

1186 - R - 45

From hanging wall of quartz vein in 1186-R-44. Sample contains blue green andesite weathered to a rusty color, abundant very fine grained disseminated pyrite, and barren quartz stringers 1 to 3cm wide. Sample displays moderate to heavy hydrothermal alteration.

1186 - R - 46

Channel sample taken from 80cm wide zone. Contains blue-black sheared basaltic rock displaying moderate to heavy hydrothermal alteration. Sample contains trace to 40% pyrite as disseminations, white quartz stringers and graphite gouge along fractures. Shear trends 178 + 73 degrees Southwest.

1186 - R - 47

From footwall of 1186-R-46. Same as 1186-R-46 with less alteration and less shearing.

1186 - R - 48

From hanging wall of 1186-R-46. Sample contains green volcanic breccia cemented with white quartz. There is minor disseminated pyrite, graphite along fractures and calcareous fracture filling.

1186 - R - 49 to 50

1 m wide channel samples from black, moderately altered shale, containing minor fine grained pyrite in 1mm wide bands along bedding. Also abundant chlorite and limonite along fractures and bedding planes. Bedding is 137 + 73 degrees Southwest.

1186 - R - 51 to 56

2 m wide channel samples from green pyroxene porphyry andesite displaying moderate to heavy alteration. Also abundant limonite along fractures, joints and shears.

1186 - R - 57 to 60

2m wide channel samples from dark green, moderately altered andesite weathered to rusty-brown. There is trace pyrite in rock and minor epidote along fractures.

1186 - R - 61

From 1 to 5cm wide of white quartz stringers in gray-green slightly altered andesite. Quartz stringers trend 108 + 60 Southwest.

1186 - R - 62

45cm channel sample of white, coarse grained quartz vein with abundant limonite along fractures. Vein is 20cm wide with quartz stringers in green andesite making up remainder of sample.

RA - 1

.61m white glassy quartz vein with abundant limonite along fractures; contains weathered pyrite cubes.

RA - 2

.9m milky-white to clear-glassy quartz vein and silicified andesitic wall rock. Contains sparce, fine grained pyrite and chalcopyrite.

RA - 3

.3m milky-white to clear glassy quartz vein and silicified andesitic wall rock. Contains sparse, fine grained pyrite and chalcopyrite.

APPENDIX VI

Time/Cost Distribution

APPENDIX VI

TIME - COST DISTRIBUTION

The claims toward which work is being applied with this report is the Gold Mount claim group held by Monica Resources Ltd. Field work was completed by Strato Geological Engineering Ltd. during the period of October 2, 1986 through December 20, 1986. Office work was completed during January and February, 1987.

A listing of personnel and distribution of costs is as follows:

Personnel

L. Christenson, M.Sc.	Project Geologist	
F. Dispirito, P.Eng.	Project Engineer	
R. Englund, B.Sc.	Project Geophysicist	
R. Arnold, M.Sc., P.Geol.	Sr. Geologist	RA/BA
C. Nagati, B.Sc.	Geologist	CN
R. Hughes, B.Sc.	Geologist	
M. Mills, B.Sc.	Geologist	
P. Bartier, B.Sc.	Geologist	
G. Cote	Miner (Certified)	
B. Matheson	Miner	
R. Lewis, C. Tech.	Surveyor	
D. Byrne	Field Assistant	
R. Mitchell	Tech., Field Assistant	
D. Hutchinson	Tech., Field Assistant	

Cost Distribution

Field Work - geological, geophysics, sampling, underground, surveying, bulk sample, core logging - Oct. 2 to Dec. 20, 1986 - 318 md.		$ 60,420.00
Room and Board - 258 man days @ $ 50.00/md		13,400.00
Vehicular - 4WD Trucks - 102 days @ $ 105.00/day (incl. gas, oil, insurance, etc.)		10,710.00
Underground Mining and Bulk Sampling		
- Equipment rentals, rock drill	2,680.00	
- Truck - 3/4 Ton 4X4 (21days @ $ 120.00/d)	2,520.00	
- Materials and Supplies - timber, explosives, etc.	3,010.82	
- Backhoe - 26.5 hrs @ $ 45.00/hr plus mob-demob	2,402.00	
- JD-4 Caterpillar - 14hrs @ $ 45.00/hr	630.00	
- Bulk Sample Processing - Sando Industries Ltd.	3,000.00	
		$ 14,242.82
Rock, drill core, and soil sample analysis		7,600.00
Field Supplies, consumables, etc.		1,600.00
Diamond Drilling - 958 m @ $ 70.00/m plus materials and supplies		68,880.00
D-8 Caterpillar - roadbuilding, drill sites, 46.5hrs @ $ 120.00/hr plus mob-demob Abbotsford		6,894.00
Reports - data processing, analysis and interpretation		4,200.00
Administration, drafting, reproduction, shipping, L.D. telephone, etc.		2,730.00
Total		$ 190,676.82

Signed: _____
Strato Geological Engineering Ltd.

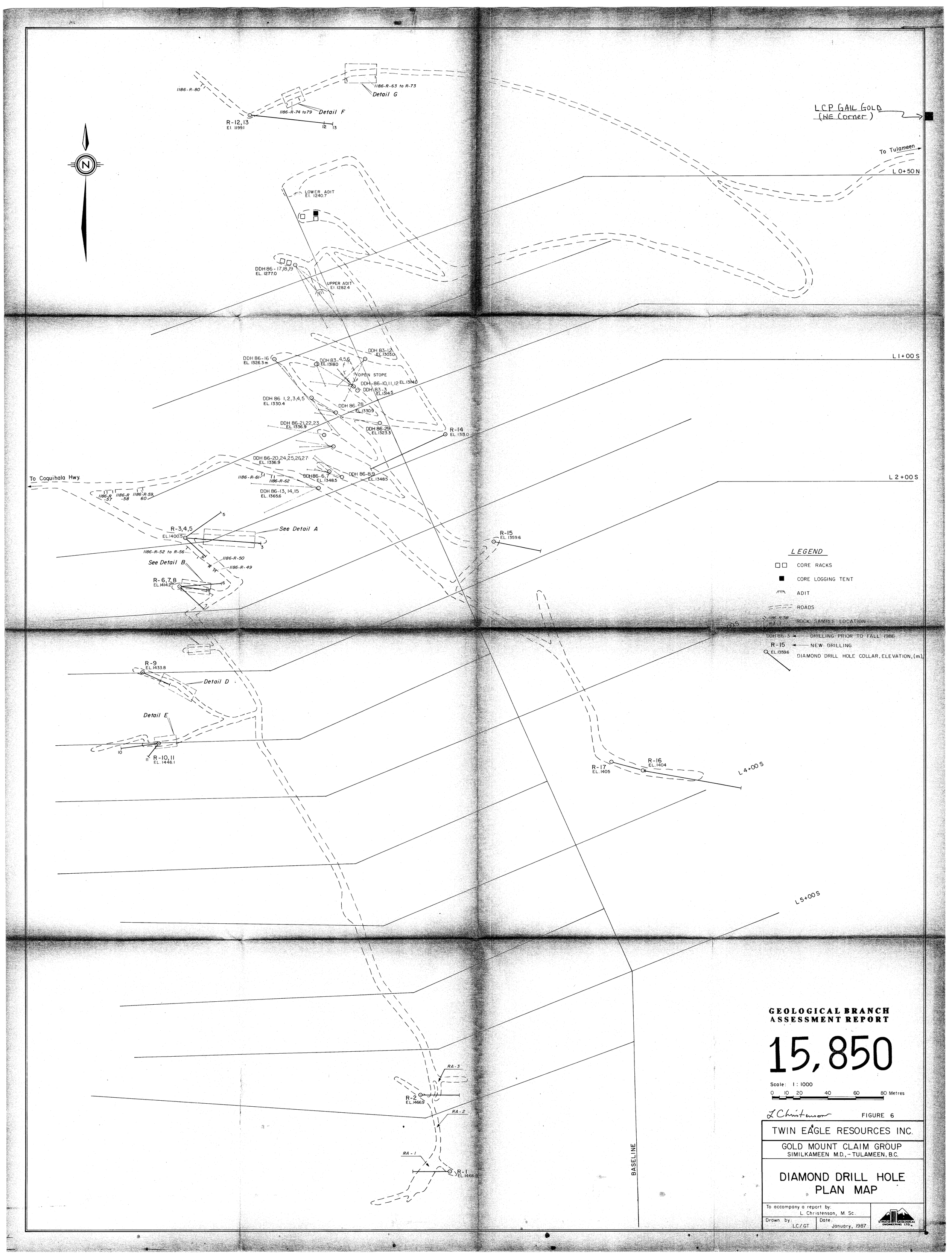
N
LCP GAIL GOLD (NE Corner)
To Tulameen
L 0+50 N
L 1+00 S
L 2+00 S
L 3+00 S
L 4+00 S
L 5+00 S
BASELINE
To Coquihala Hwy.
1186-R-80
1186-R-63 to R-73
Detail G
1186-R-74 to 79
Detail F
R-12,13
El. 1199.1
LOWER ADIT
El. 1240.7
DDH 86-17,18,19
EL. 1277.0
UPPER ADIT
El. 1282.4
DDH 86-16
EL. 1326.3 m
DDH 83-4,5,6
EL. 1318.0
DDH 83-1,2
EL. 1303.0
OPEN STOPE
DDH 86-10,11,12 EL. 1314.0
DDH 83-3
EL. 1314.5
DDH 86-1,2,3,4,5
EL. 1330.4
DDH 86-28
EL. 1330.9
DDH 86-21,22,23
EL. 1336.9
DDH 86-29
EL. 1323.3
R-14
EL. 1313.0
DDH 86-20,24,25,26,27
EL. 1336.9
1186-R-61
1186-R-62
DDH 86-6,7
EL. 1348.5
DDH 86-8,9
EL. 1348.5
DDH 86-13,14,15
EL. 1365.6
1186-R-57
1186-R-58
1186-R-59,60
R-3,4,5
EL. 1400.5
See Detail A
1186-R-52 to R-56
1186-R-50
1186-R-49
See Detail B
R-6,7,8
EL. 1414.2m
R-15
EL. 1359.6
Detail C
R-9
EL. 1433.8
Detail D
Detail E
R-10,11
EL. 1446.1
R-17
EL. 1405
R-16
EL. 1404
RA-3
R-2
EL. 1466.9
RA-2
RA-1
R-1
EL. 1466.9
LEGEND
CORE RACKS
CORE LOGGING TENT
ADIT
ROADS
1186-R-58
RA-1
ROCK SAMPLE LOCATION
DDH 86-3
DRILLING PRIOR TO FALL 1986
R-15
NEW DRILLING
EL. 1359.6
DIAMOND DRILL HOLE COLLAR, ELEVATION, (m)
GEOLOGICAL BRANCH
ASSESSMENT REPORT
15,850
Scale: 1 : 1000
0 10 20 40 60 80 Metres
L Christenson
FIGURE 6
TWIN EAGLE RESOURCES INC.
GOLD MOUNT CLAIM GROUP
SIMILKAMEEN M.D., - TULAMEEN, B.C.
DIAMOND DRILL HOLE
PLAN MAP
To accompany a report by:
L. Christenson, M. Sc.
Drawn by:
LC/GT
Date:
January, 1987
STRATO GEOLOGICAL ENGINEERING LTD.

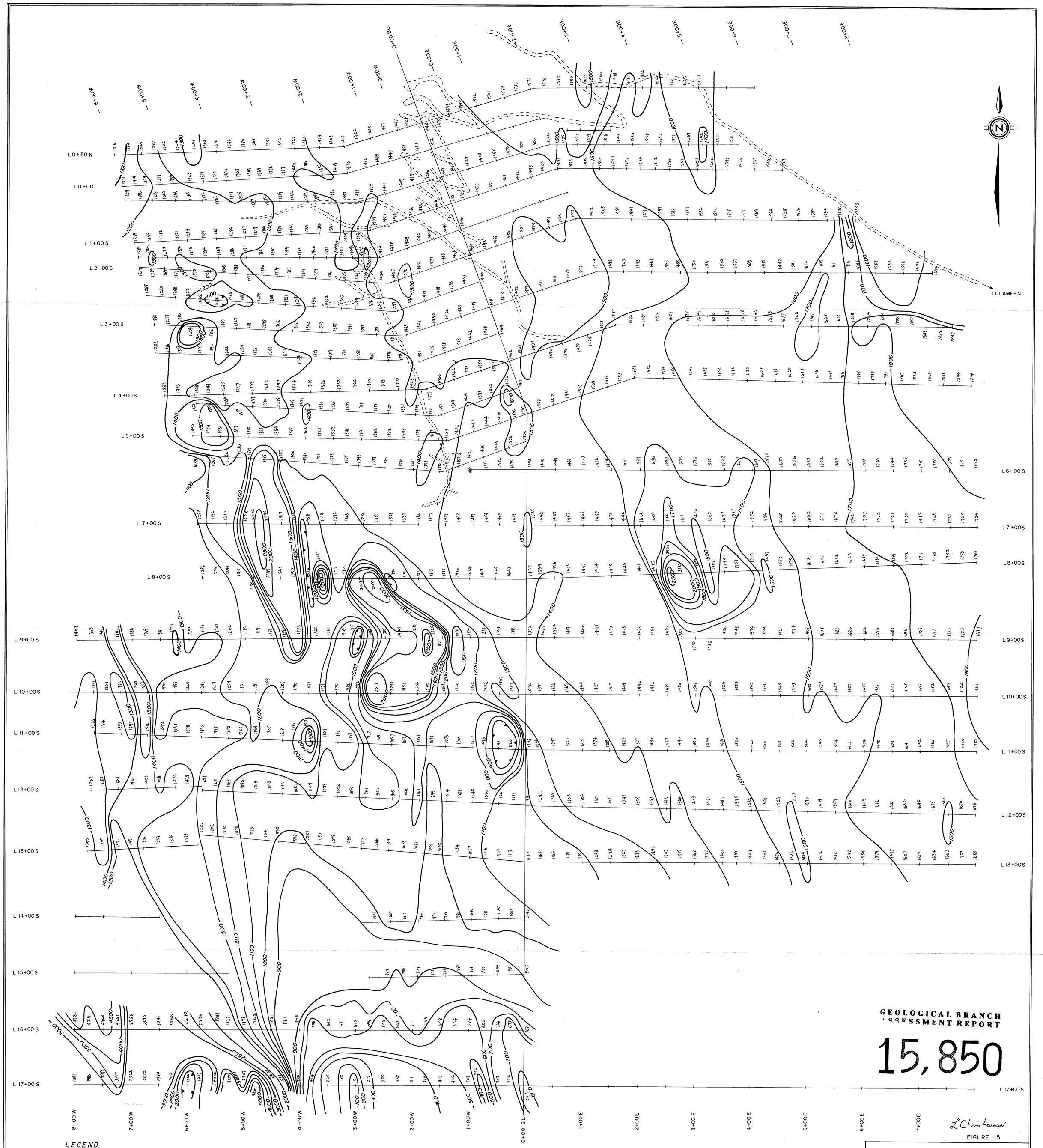

GEOLOGICAL BRANCH
ASSESSMENT REPORT

15,850

L Christenson

FIGURE 15

NOTES:

- INSTRUMENT : SCINTREX MODEL MP-2 PROTON MAGNETOMETER.
- TOTAL FIELD SURVEY : MAGNETIC DATUM 55,000 GAMMAS.
- CONTOUR INTERVAL : 100 GAMMAS.

SCALE 1: 2500

0 50 100 150 200 250 Metres

TWIN EAGLE RESOURCES INC.

GOLD MOUNT CLAIM GROUP
SIMILKAMEEN M.D., - TULAMEEN, B.C.

MAGNETOMETER CONTOUR MAP

To accompany a report by: L. Christenson, M.Sc.

Drawn by: LC/GT

Date: January, 1987

STRATO GEOLOGICAL ENGINEERING LTD.

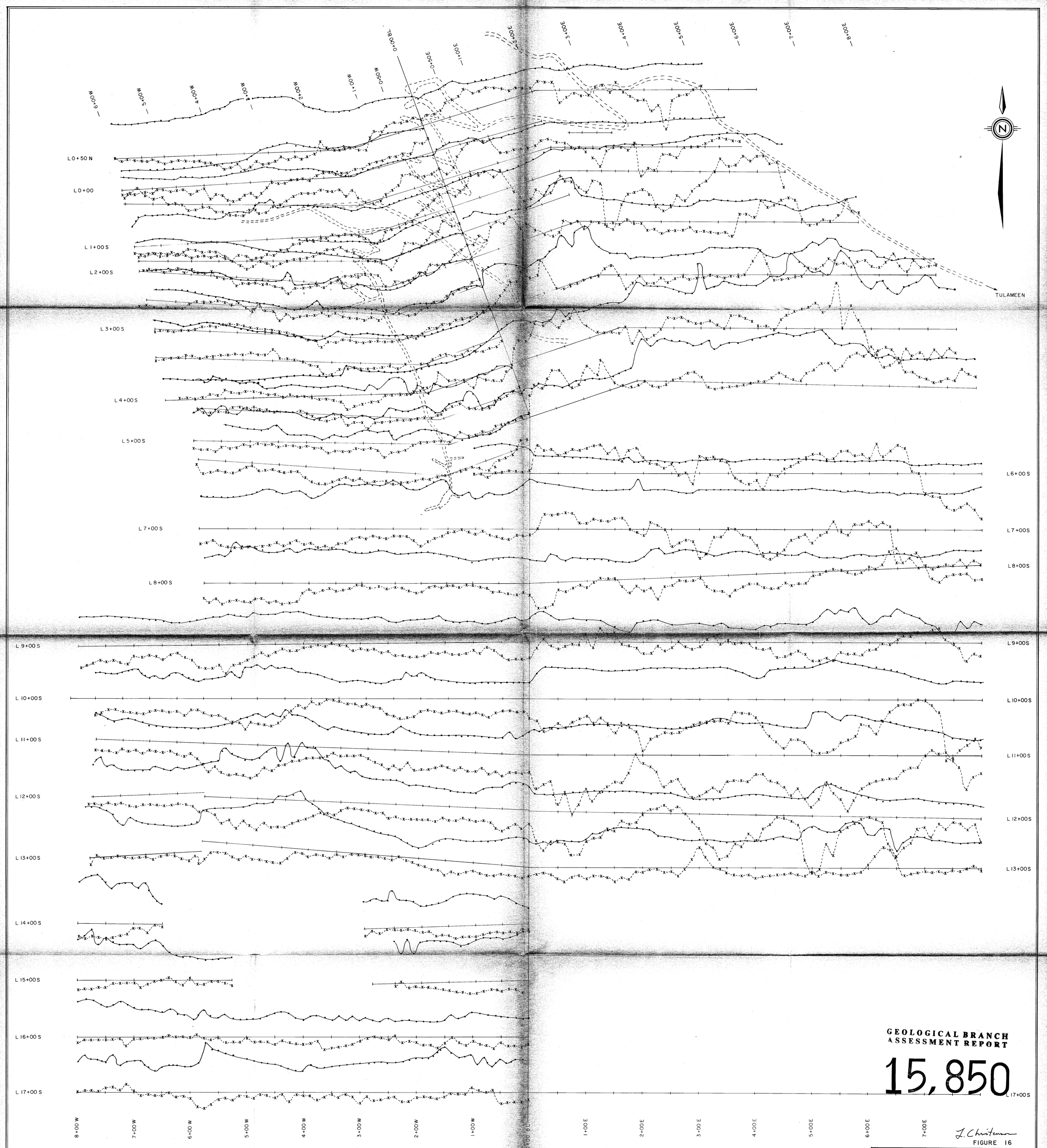

GEOLOGICAL BRANCH
ASSESSMENT REPORT

15,850

L. Christenson

FIGURE 16

LEGEND

- ROAD
- STATION LOCATION
- CREEK

FIELD STRENGTH SCALE (200 SUBTRACTED FROM ALL VALUES)

DIP ANGLE SCALE

NOTES:

- Receiver : Sabre Electronics Model 27
- Transmitter : NPG Cutler, frequency 17.8 kHz.

SCALE 1:2500

0 50 100 150 200 250 Metres

TWIN EAGLE RESOURCES INC.

GOLD MOUNT CLAIM GROUP
SIMILKAMEEN M.D., – TULAMEEN, B.C.

VLF-EM SURVEY FIELD STRENGTH & DIP ANGLE PROFILES

To accompany a report by: L. Christenson, M. Sc.

Drawn by: GS/GT

Date: January, 1987

STRATO GEOLOGICAL ENGINEERING LTD.

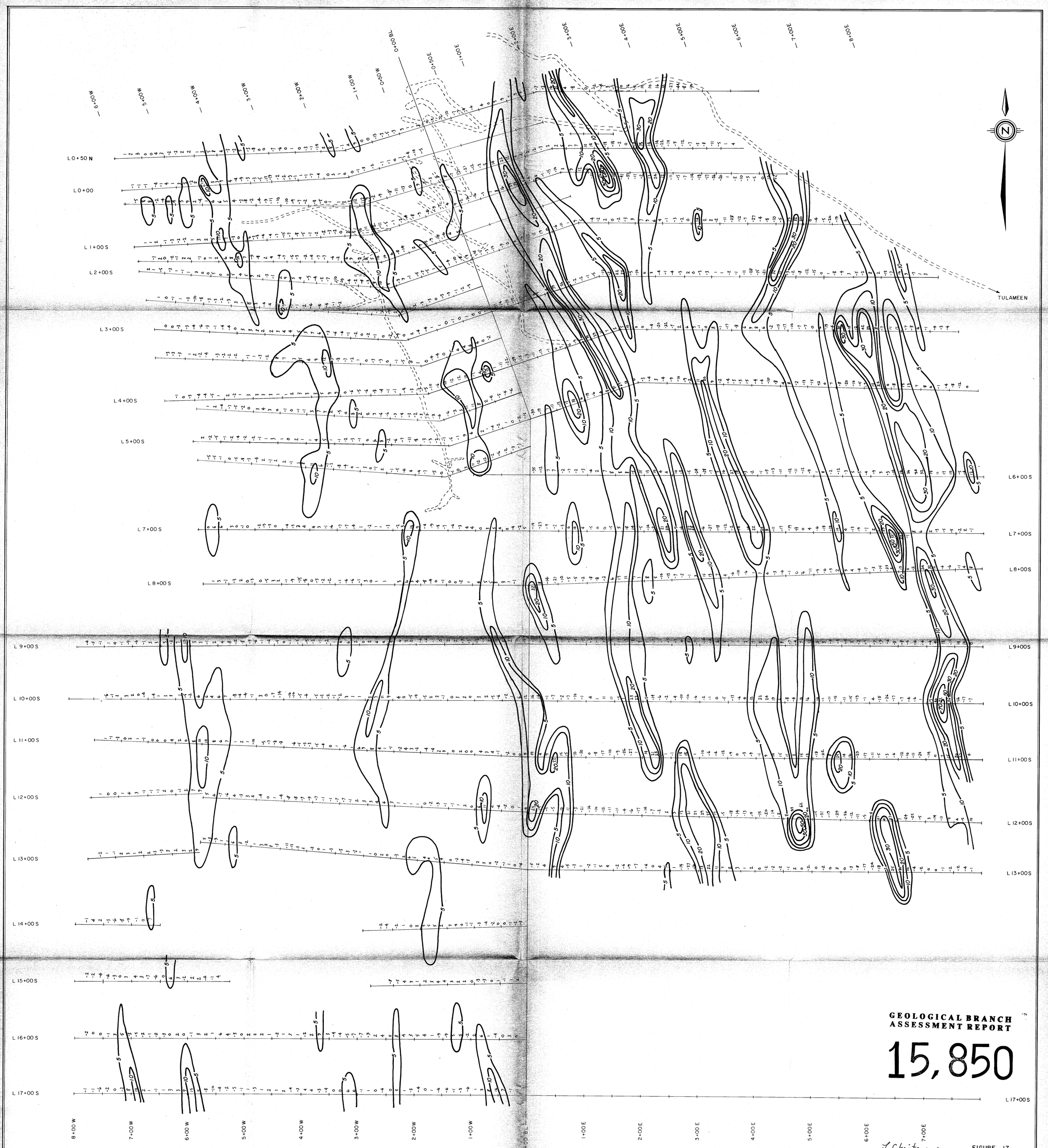

GEOLOGICAL BRANCH
ASSESSMENT REPORT

15,850

LEGEND

- ROAD
- STATION LOCATION
- CREEK

NOTES:

- Receiver : Sabre Electronics Model 27
- Transmitter : NPG Cutler, frequency 17.8 kHz.
- Contour Interval 5, 10, 20.

SCALE 1:2500

0 50 100 150 200 250 Metres

L Christenson

FIGURE 17

TWIN EAGLE RESOURCES INC.

GOLD MOUNT CLAIM GROUP
SIMILKAMEEN M.D., – TULAMEEN, B.C.

VLF-EM SURVEY FRASER FILTER CONTOUR MAP

To accompany a report by: L. Christenson, M. Sc.

Drawn by: LC/GT

Date: January, 1987

STRATO GEOLOGICAL ENGINEERING LTD.

SAMPLE#	Cu PPM	Pb PPM	Zn PPM	Ag PPM	Ni PPM	Au# PPB
R L0+50N 6+00W	87	9	90	.2	37	1
R L0+50N 5+50W	67	8	132	.1	20	1
R L0+50N 5+00W	76	11	92	.2	19	3
R L0+50N 4+50W	71	5	96	.2	16	8
R L0+50N 4+00W	62	6	108	.3	19	4
R L0+50N 3+50W	42	10	77	.1	17	1
R L0+50N 3+00W	99	7	125	.2	21	2
R L0+50N 2+50W	60	4	114	.2	14	3
R L0+50N 2+00W	64	5	98	.1	15	4
R L0+50N 1+50W	54	6	91	.1	20	3
R L0+50N 1+00W	289	12	106	.6	17	2550
R L0+50N 0+50W	38	11	90	.1	21	3
R L0+50N 0+00BL	349	80	281	4.9	41	15100
R L0+00S 6+00W	74	4	119	.1	19	8
R L0+00S 5+50W	71	10	136	.1	18	5
R L0+00S 5+00W	80	10	104	.3	18	1
R L0+00S 4+50W	59	7	104	.2	18	6
R L0+00S 4+00W	46	6	143	.1	14	3
R L0+00S 3+50W	54	7	86	.3	18	4
R L0+00S 3+00W	78	7	107	.2	14	1
R L0+00S 2+50W	6	7	80	.2	6	3
R L0+00S 2+00W	17	9	121	.1	12	4
R L0+00S 1+50W	24	6	134	.2	18	102
R L0+00S 1+00W	60	4	100	.1	15	62
R L0+00S 0+50W	39	4	144	.1	20	13
R L0+00S 0+00BL	114	6	119	.1	30	33
R L0+50S 6+00W	69	2	106	.1	16	1
R L0+50S 5+50W	56	5	127	.2	18	1
R L0+50S 5+00W	50	5	113	.1	16	2
R L0+50S 4+50W	58	4	121	.2	19	1
R L0+50S 4+00W	30	4	122	.2	15	1
R L0+50S 3+50W	43	5	127	.2	14	4
R L0+50S 3+00W	34	11	160	.1	15	21
R L0+50S 2+50W	58	3	105	.1	21	6
R L0+50S 2+00W	52	7	95	.1	19	23
R L0+50S 1+50W	24	5	92	.1	20	175
STD C/AU-S	58	38	130	6.9	68	52

SAMPLE#	Cu PPM	Pb PPM	Zn PPM	Ag PPM	Ni PPM	Au# PPB
R L0+50S 1+00W	57	9	83	.3	13	26
R L0+50S 0+50W	25	6	102	.1	15	52
R L0+50S 0+00BL	43	10	113	.5	44	3
R L1+00S 6+00W	93	8	116	.3	20	1
R L1+00S 5+50W	36	10	164	.3	20	1
R L1+00S 5+00W	39	10	120	.1	16	1
R L1+00S 4+50W	36	12	207	.5	16	34
R L1+00S 4+00W	31	14	127	.1	16	1
R L1+00S 3+50W	74	7	166	.6	18	3
R L1+00S 3+00W	27	11	107	.1	17	1
R L1+00S 2+50W	40	9	101	.3	20	2
R L1+00S 2+00W	27	10	122	.2	19	6
R L1+00S 1+50W	30	8	111	.1	19	1
R L1+00S 1+00W	52	6	98	.2	28	1
R L1+00S 0+50W	46	7	101	.2	16	1
R L1+00S 0+00BL	35	8	95	.2	18	1
R L1+50S 6+00W	58	8	109	.2	18	1
R L1+50S 5+50W	81	9	113	.1	21	1
R L1+50S 5+00W	36	7	117	.1	15	2
R L1+50S 4+00W	39	7	163	.3	15	3
R L1+50S 3+50W	94	9	108	.1	18	1
R L2+00S 6+00W	70	6	97	.1	16	1
R L2+00S 5+50W	73	7	124	.2	20	3
R L2+00S 5+00W	31	7	122	.3	14	1
R L2+00S 4+50W	47	4	147	.1	17	1
R L2+00S 4+00W	34	5	133	.2	14	4
R L2+00S 3+50W	136	6	134	.3	18	19
R L2+50S 6+00W	47	6	68	.1	13	1
R L2+50S 5+50W	40	7	224	.1	16	1
R L2+50S 5+00W	33	10	212	.1	13	1
R L2+50S 4+50W	74	6	107	.2	18	1
R L2+50S 4+00W	47	8	91	.2	21	2
R L2+50S 3+50W	34	9	136	.1	15	1
R L3+00S 6+00W	90	9	194	.5	20	1
R L3+00S 5+50W	80	8	168	.1	17	1
R L3+00S 5+00W	45	7	123	.4	13	1
STD C/AU-S	59	36	137	7.0	69	52

SAMPLE#	Cu PPM	Pb PPM	Zn PPM	Ag PPM	Ni PPM	Au# PPB
R L3+00S 4+50W	19	9	82	.3	6	1
R L3+00S 4+00W	26	11	102	.4	13	12
R L3+00S 3+50W	42	12	157	.3	17	2
R L3+00S 3+00W	45	9	154	.3	10	1
R L3+00S 2+50W	29	12	104	.3	16	1
R L3+00S 2+00W	39	10	125	.2	19	8
R L3+00S 1+75W	78	13	118	.4	34	1
R L3+00S 1+50W	44	7	129	.4	21	1
R L3+00S 1+00W	72	13	125	.4	35	36
R L3+00S 0+50W	38	10	107	.3	27	5
R L3+50S 6+00W	44	12	122	.5	13	2
R L3+50S 5+50W	70	14	153	.4	23	3
R L3+50S 5+00W	55	9	95	.3	20	2
R L3+50S 4+50W	37	11	118	.4	16	1
R L3+50S 4+00W	58	9	101	.3	19	6
R L3+50S 3+50W	54	11	115	.2	18	2
R L3+50S 3+00W	197	11	117	.8	23	1
R L3+50S 2+50W	36	7	91	.2	14	1
R L3+50S 2+00W	43	12	132	.3	32	1
R L3+50S 1+50W	36	8	131	.4	24	1
R L3+50S 1+00W	61	9	124	.3	30	1
R L3+50S 0+50W	34	11	127	.4	22	2
R L3+50S 0+00BL	32	11	125	.3	20	1
R L4+00S 5+50W	63	12	105	.3	19	2
R L4+00S 5+00W	54	7	121	.3	18	2
R L4+00S 4+50W	71	10	123	.3	36	2
R L4+00S 4+00W	64	10	137	.4	19	1
R L4+00S 3+50W	52	10	176	.8	19	1
R L4+00S 3+00W	55	6	115	.4	15	1
R L4+00S 2+50W	40	10	171	.3	24	1
R L4+00S 2+00W	55	10	126	.2	29	1
R L4+00S 1+50W	38	8	176	.2	22	2
R L4+00S 1+00W	50	13	104	.3	20	1
R L4+00S 0+50W	34	6	144	.4	26	3
R L4+00S 0+00BL	32	14	142	.2	20	1
R L4+50S 6+50W	44	8	223	.2	35	1
STD C/AU-S	59	39	135	7.0	68	52

SAMPLE#	Cu PPM	Pb PPM	Zn PPM	Ag PPM	Ni PPM	Au# PPB
R L4+50S 5+50W	61	7	138	.1	19	1
R L4+50S 5+00W	56	9	170	.1	18	4
R L4+50S 4+50W	62	8	123	.1	22	1
R L4+50S 4+00W	43	7	142	.1	21	1
R L4+50S 3+50W	58	7	107	.1	18	1
R L4+50S 3+00W	57	10	122	.1	21	1
R L4+50S 2+50W	62	9	105	.1	22	108
R L4+50S 2+00W	46	10	91	.1	27	26
R L4+50S 1+50W	38	9	105	.1	23	1
R L4+50S 1+00W	42	8	138	.3	36	12
R L4+50S 0+50W	35	7	123	.1	16	1
R L4+50S 0+00BL	45	13	107	.1	36	1
R L5+00S 6+00W	16	9	601	.1	26	1
R L5+00S 5+50W	69	6	111	.1	23	1
R L5+00S 5+00W	89	6	121	.1	24	1
R L5+00S 4+50W	47	6	127	.1	24	2
R L5+00S 4+00W	66	13	160	.1	17	1
R L5+00S 3+50W	32	9	125	.3	15	2
R L5+00S 3+00W	72	8	113	.2	26	7
R L5+00S 2+50W	39	8	118	.1	19	1
R L5+00S 2+00W	56	9	83	.2	22	1
R L5+00S 1+50W	62	12	108	.1	24	4
R L5+00S 1+00W	24	6	107	.1	19	1
R L5+00S 0+50W	41	9	99	.1	27	1
R L5+00S 0+00BL	59	3	123	.2	65	1
R L5+50S 6+00W	67	7	418	.1	36	1
R L5+50S 5+50W	94	10	117	.1	23	2
R L5+50S 5+00W	73	5	111	.1	25	12
R L5+50S 4+50W	90	10	118	.1	28	1
R L5+50S 4+00W	73	11	115	.2	19	58
R L5+50S 3+50W	139	8	108	.3	24	1
R L5+50S 3+00W	65	10	110	.1	24	3
R L5+50S 2+50W	34	10	170	.1	21	1
R L5+50S 2+00W	47	9	102	.1	23	850
R L5+50S 1+50W	61	8	112	.1	31	11
R L5+50S 1+00W	35	9	147	.2	23	9
STD C/AU-S	58	40	135	6.9	69	51

SAMPLE#	Cu PPM	Pb PPM	Zn PPM	Ag PPM	Ni PPM	Au# PPB
R L5+50S 0+50W	36	5	130	.1	24	1
R L5+50S 0+00BL	52	7	140	.1	31	6
R L6+00S 1+00W	32	8	137	.3	38	5
R L6+00S 0+50W	47	7	133	.1	21	2
R L6+00S 0+00BL	15	6	176	.2	16	8
R L7+00S 6+00W	63	7	202	.2	24	1
R L7+00S 5+50W	120	8	255	.2	48	15
R L7+00S 5+00W	79	4	100	.1	65	1
R L7+00S 4+50W	63	3	92	.2	40	1
R L7+00S 4+00W	70	8	100	.2	29	11
R L7+00S 3+50W	77	6	134	.1	29	7
R L7+00S 3+00W	65	7	133	.1	24	1
R L7+00S 2+50W	62	4	128	.2	23	4
R L7+00S 2+00W	61	7	67	.1	22	9
R L7+00S 1+50W	51	8	124	.2	31	5
R L7+00S 1+00W	59	12	305	.2	41	7
R L7+00S 0+50W	61	10	116	.1	45	1
R L7+00S 0+00BL	98	5	102	.3	57	1
R L8+00S 6+00W	58	5	96	.1	20	1
R L8+00S 5+50W	46	5	126	.1	32	2
R L8+00S 5+00W	44	3	147	.2	25	1
R L8+00S 4+50W	83	4	119	.3	43	8
R L8+00S 4+00W	110	2	93	.2	39	1
R L8+00S 3+50W	53	9	134	.3	60	2
R L8+00S 3+00W	78	6	90	.2	54	11
R L8+00S 2+50W	74	6	160	.2	25	3
R L8+00S 2+00W	35	5	99	.1	18	1
R L8+00S 1+50W	44	5	160	.1	28	1
R L8+00S 1+00W	93	8	78	.2	21	35
R L8+00S 0+50W	83	13	138	.4	57	10
R L8+00S 0+00W	93	7	104	.1	40	4
R L9+00S 8+00W	114	8	166	.2	32	1
R L9+00S 7+50W	65	5	98	.2	24	1
R L9+00S 7+00W	96	6	159	.1	31	2
R L9+00S 6+50W	124	4	164	.2	31	12
R L9+00S 6+00W	66	5	223	.3	34	4
STD C/AU-S	56	39	136	7.0	68	50

SAMPLE#	Cu PPM	Pb PPM	Zn PPM	Ag PPM	Ni PPM	Au# PPB
R L9+00S 5+50W	54	5	208	.2	28	3
R L9+00S 5+00W	74	7	151	.1	32	8
R L9+00S 4+50W	153	8	73	.2	99	3
R L9+00S 4+00W	43	6	79	.2	96	1
R L9+00S 3+50W	572	5	124	.3	126	3
R L9+00S 3+00W	302	6	82	.2	111	1
R L9+00S 2+50W	104	8	158	.1	46	4
R L9+00S 2+00W	52	5	82	.1	55	1
R L9+00S 1+50W	77	6	105	.1	45	2
R L9+00S 1+00W	78	9	158	.2	34	7
R L9+00S 0+50W	90	22	295	.2	52	29
R L9+00S 0+00BL	120	10	115	.2	33	1
R L10+00S 8+00W	113	9	119	.1	37	3
R L10+00S 7+50W	78	12	140	.2	27	20
R L10+00S 7+00W	106	10	196	.1	41	4
R L10+00S 6+50W	72	7	118	.2	34	3
R L10+00S 6+00W	102	4	140	.2	27	1
R L10+00S 5+50W	105	9	144	.3	35	5
R L10+00S 5+00W	76	3	142	.2	23	1
R L10+00S 4+50W	58	6	87	.1	35	33
R L10+00S 4+00W	96	11	117	.3	39	1
R L10+00S 3+50W	40	10	168	.1	36	1
R L10+00S 3+00W	78	9	130	.1	58	1
R L10+00S 2+50W	45	4	59	.1	76	1
R L10+00S 2+00W	66	9	164	.1	71	1
R L10+00S 1+50W	109	8	137	.1	61	1
R L10+00S 1+00W	115	10	159	.2	41	1
R L10+00S 0+50W	54	7	168	.3	49	1
R L10+00S 0+00W	193	6	149	.2	30	11
R L11+00S 8+00W	287	11	122	.2	39	1
R L11+00S 7+50W	190	12	123	.1	32	1
R L11+00S 7+00W	358	11	173	.2	37	301
R L11+00S 6+50W	67	12	144	.3	30	6
R L11+00S 6+00W	48	6	201	.1	28	1
R L11+00S 5+50W	83	9	138	.1	27	2
R L11+00S 5+00W	115	9	82	.1	30	2
STD C/AU-S	57	37	127	6.9	64	53

SAMPLE#	Cu PPM	Pb PPM	Zn PPM	Ag PPM	Ni PPM	Au# PPB
R L11+00S 4+50W	71	4	70	.1	41	1
R L11+00S 4+00W	185	9	150	.1	23	4
R L11+00S 3+50W	52	6	116	.1	33	73
R L11+00S 3+00W	107	8	164	.1	22	8
R L11+00S 2+50W	182	8	217	.2	113	1
R L11+00S 2+00W	78	9	141	.2	29	2
R L11+00S 1+50W	84	8	108	.2	45	1
R L11+00S 1+00W	87	9	130	.1	34	1
R L11+00S 0+50W	211	9	124	.1	39	9
R L11+00S 0+00BL	67	12	239	.2	23	5
R L12+00S 8+00W	75	11	187	.1	53	4
R L12+00S 7+50W	35	8	103	.4	24	1
R L12+00S 7+00W	154	8	177	.1	32	1
R L12+00S 6+50W	64	6	234	.1	32	2
R L12+00S 6+00W	105	12	197	.1	48	1
R L12+00S 5+50W	101	9	137	.1	33	1
R L12+00S 5+00W	45	10	126	.1	21	2
R L12+00S 4+50W	138	13	138	.1	29	10
R L12+00S 4+00W	164	4	98	.1	23	1
R L12+00S 3+50W	261	4	105	.2	18	8
R L12+00S 3+00W	215	8	122	.1	19	28
R L12+00S 2+50W	200	4	67	.4	98	1
R L12+00S 2+00W	76	7	138	.1	35	390
R L12+00S 1+50W	60	3	96	.2	40	5
R L12+00S 1+00W	85	8	121	.1	47	40
R L12+00S 0+50W	103	4	111	.1	25	11
R L13+00S 8+00W	270	8	141	.1	40	1
R L13+00S 7+50W	325	13	169	.2	31	14
R L13+00S 7+00W	197	11	155	.1	41	1
R L13+00S 6+50W	112	12	129	.1	52	1
R L13+00S 5+50W	144	11	99	.2	41	4
R L13+00S 5+00W	88	12	162	.1	29	5
R L13+00S 4+50W	86	10	172	.3	27	1
R L13+00S 4+00W	128	11	117	.1	30	2
R L13+00S 3+50W	152	5	103	.1	22	4
R L13+00S 3+00W	60	2	60	.1	31	3
STD C/AU-S	59	36	137	6.9	68	52

SAMPLE#	Cu PPM	Pb PPM	Zn PPM	Ag PPM	Ni PPM	Au# PPB
R L13+00S 2+50W	84	8	150	.1	30	1
R L13+00S 1+50W	78	14	140	.1	16	24
R L13+00S 1+00W	102	8	133	.1	25	121
R L13+00S 0+50W	49	8	118	.1	29	3
R L13+00S 0+00BL	66	9	128	.1	33	5
R L14+00S 7+50W	115	13	295	.2	56	1
R L14+00S 2+50W	342	9	121	.2	24	2
R L14+00S 2+00W	220	10	169	.1	23	1
R L14+00S 1+50W	121	13	138	.1	35	2
R L14+00S 1+00W	70	11	98	.1	25	27
R L14+00S 0+50W	64	5	128	.1	41	7
R L14+00S 0+00BL	64	5	119	.1	38	1
R L16+00S 7+50W	61	11	123	.1	63	1
R L16+00S 6+50W	312	11	218	.1	39	6
R L16+00S 5+50W	113	18	115	.2	24	4
R L16+00S 5+00W	129	10	143	.2	48	7
R L16+00S 4+50W	114	12	116	.1	24	18
R L16+00S 3+50W	117	9	112	.3	32	10
R L16+00S 2+50W	340	10	126	.3	27	3
R L16+00S 2+00W	218	10	164	.1	30	13
R L17+00S 8+00W	76	9	111	.1	71	1
R L17+00S 6+00W	54	9	142	.1	27	1
R L17+00S 5+50W	68	8	323	.1	38	4
R L17+00S 4+50W	106	12	129	.1	20	16
R L17+00S 4+00W	139	4	263	.5	30	131
R L17+00S 3+50W	70	12	79	.1	38	12
R L17+00S 3+00W	49	3	14	.2	3	1
R L17+00S 2+50W	123	17	130	.1	24	30
R L17+00S 2+00W	168	14	70	.1	24	4
R L17+00S 1+50W	26	4	55	.1	28	1
R L17+00S 1+00W	108	2	99	.1	21	3
R L17+00S 0+50W	54	7	132	.4	30	2
R L17+00S 0+00BL	26	5	116	.1	49	1
STD C/AU-S	57	39	133	7.0	70	52

SAMPLE#	Cu PPM	Pb PPM	Zn PPM	Ag PPM	Ni PPM	Au# PPB
BR-3	24	14	80	.1	13	1
R L50N 3+00E	24	7	84	.1	19	1
R L50N 4+00E	37	6	109	.1	36	85
R L50N 4+50E	22	10	116	.1	31	1
R L50N 5+00E	59	12	118	.1	57	1
R L50N 5+50E	12	13	105	.1	11	1
R L50N 6+00E	11	10	124	.1	15	5
R L0+50N 0+00E	43	15	163	.1	22	780
R L0+50N 0+50E	70	9	130	.1	36	1
R L0+50N 1+00E	34	9	126	.2	23	1
R L0+50N 1+50E	21	12	141	.1	27	1
R L0+50N 2+00E	21	13	94	.1	30	1
R L0+00N 0+00E	63	14	176	.2	24	16
R L0+00N 0+50E	33	10	152	.2	19	2
R L0+00N 1+00E	77	16	185	.1	29	1
R L0+00N 1+50E	30	10	124	.1	42	1
R L0+00N 2+00E	71	17	130	.2	45	13
R L0+50S 0+00E	74	12	114	.1	63	1
R L0+50S 0+50E	54	6	158	.2	14	7
R L0+50S 1+00E	63	13	111	.1	40	1
R L0+50S 1+50E	27	15	95	.1	51	16
R L0+50S 2+00E	78	7	90	.1	154	20
R L0+50S 2+50E	31	11	157	.1	44	1
R L0+50S 3+00E	70	10	110	.3	40	1
R L0+50S 3+50E	35	13	114	.1	19	1
R L0+50S 4+00E	18	14	100	.1	20	1
R L0+50S 4+50E	22	12	163	.1	17	2
R L0+50S 5+00E	35	12	122	.1	24	2
R L0+50S 5+38E	54	16	116	.1	18	14
R L1+00S 0+00E	46	12	84	.2	25	1
R L1+00S 0+50E	46	8	140	.2	11	1
R L1+00S 1+00E	64	13	187	.1	47	2
R L1+00S 1+50E	38	12	136	.3	95	1
R L1+00S 2+00E	58	14	94	.1	122	1
R L1+00S 2+50E	36	11	142	.1	35	1
R L1+00S 3+50E	34	12	88	.2	25	1
STD C/AU-S	60	35	135	7.2	68	52

SAMPLE#	Cu PPM	Pb PPM	Zn PPM	Ag PPM	Ni PPM	Au# PPB
R L1+00S 4+00E	36	9	84	.1	23	1
R L1+00S 5+00E	48	11	90	.2	74	29
R L1+00S 5+50E	100	21	112	.2	111	5
R L1+50S 1+50W	46	18	175	.3	27	1
R L1+50S 1+00W	129	11	95	.1	29	1
R L1+50S 0+50W	21	8	116	.1	16	1
R L1+50S 0+00E	83	13	104	.2	27	2
R L1+50S 0+50E	52	4	140	.1	20	11
R L1+50S 1+00E	61	13	234	.1	53	1
R L1+50S 1+50E	65	12	182	.2	190	1
R L2+00S 1+50W	38	10	157	.2	26	1
R L2+00S 1+00W	25	10	134	.3	22	1
R L2+00S 0+50W	25	10	128	.1	21	24
R L2+00S 0+00E	85	14	161	.6	30	2
R L2+00S 0+50E	50	8	107	.1	17	13
R L2+00S 1+00E	28	12	147	.2	27	1
R L2+00S 1+50E	63	5	273	.1	61	1
R L2+00S 2+00E	49	6	129	.1	99	1
R L2+00S 2+50E	35	6	154	.1	44	1
R L2+00S 3+00E	72	12	144	.6	89	45
R L2+00S 4+00E	13	8	110	.2	15	1
R L2+00S 4+50E	30	13	162	.1	26	1
R L2+00S 5+00E	26	11	112	.1	19	1
R L2+00S 5+50E	23	9	83	.1	27	1
R L2+00S 6+00E	35	8	107	.2	25	2
R L2+00S 6+50E	55	10	129	.1	56	1
R L2+00S 7+00E	174	14	124	.1	90	1
R L2+50S 1+50W	44	9	145	.1	16	1
R L2+50S 1+00W	59	7	125	.1	36	1
R L2+50S 0+50W	29	10	133	.1	29	7
R L2+50S 0+00W	29	14	116	.1	23	1
R L3+00S 0+50E	41	13	127	.1	22	1
R L3+00S 1+00E	102	16	185	.5	104	1
R L3+00S 1+50E	91	16	200	.1	60	1
R L3+00S 2+00E	133	16	172	.1	24	1
R L3+00S 2+50E	103	15	196	.7	74	2
STD C/AU-S	61	37	136	7.3	66	49

SAMPLE#	Cu PPM	Pb PPM	Zn PPM	Ag PPM	Ni PPM	Au# PPB
R L3+00S 3+00E	22	8	151	.1	27	1
R L3+00S 3+50E	54	4	205	.1	56	1
R L3+00S 4+00E	31	88	149	.2	39	1
R L3+00S 4+50E	19	6	142	.1	30	2
R L3+00S 5+00E	59	14	149	.1	75	1
R L3+00S 6+50E	46	11	193	.1	60	1
R L3+00S 7+00E	92	9	277	.3	55	2
R L3+00S 7+50E	70	9	82	.1	128	1
R L3+00S 8+00E	64	9	72	.1	55	1
R L4+00S 0+50E	43	8	136	.1	23	1
R L4+00S 1+00E	58	6	112	.1	56	1
R L4+00S 1+50E	153	9	150	.1	68	1
R L4+00S 2+00E	77	9	170	.1	116	1
R L4+00S 2+50E	15	5	128	.1	22	1
R L4+00S 3+00E	51	6	270	.3	55	1
R L4+00S 3+50E	25	6	191	.5	26	1
R L4+00S 4+00E	62	10	266	.1	41	4
R L4+00S 4+50E	39	6	107	.1	38	1
R L4+00S 5+00E	26	4	94	.2	30	1
R L4+00S 5+50E	55	10	133	.1	54	1
R L4+00S 6+00E	33	6	159	.2	121	1
R L4+00S 6+50E	122	15	323	.9	98	2
R L4+00S 7+50E	213	7	109	.1	43	1
R L4+00S 8+00E	33	7	160	.1	36	1
R L5+00S 0+50E	42	9	105	.1	34	9
R L5+00S 1+00E	39	4	157	.1	40	1
R L5+00S 1+50E	47	9	204	.3	49	1
R L5+00S 2+00E	29	8	183	.1	33	1
R L5+00S 2+50E	22	3	151	.1	50	1
R L5+00S 3+00E	26	2	139	.2	30	4
R L5+00S 3+50E	50	5	141	.3	30	1
R L5+00S 4+00E	76	3	142	.1	27	1
R L5+00S 4+50E	43	3	76	.2	20	1
R L5+00S 5+00E	30	5	85	.1	46	1
R L5+00S 5+50E	40	2	80	.1	48	1
R L5+00S 6+00E	22	2	165	.3	54	1
STD C/AU-S	61	35	133	6.8	68	53

SAMPLE#	Cu PPM	Pb PPM	Zn PPM	Ag PPM	Ni PPM	Au# PPB
R L5+00S 6+50E	52	12	130	.1	89	1
R L5+00S 7+00E	52	11	206	.1	41	6
R L5+00S 7+50E	57	15	169	.1	22	2
R L5+00S 8+00E	71	12	117	.1	22	1
R L6+00S 0+50E	24	17	131	.1	22	1
R L6+00S 1+00E	36	18	109	.1	42	2
R L6+00S 1+50E	43	13	153	.2	42	1
R L6+00S 2+00E	48	11	151	.1	84	1
R L6+00S 2+50E	49	13	209	.1	55	1
R L6+00S 3+00E	64	17	217	.1	54	8
R L6+00S 3+50E	50	12	213	.7	43	3
R L6+00S 4+00E	63	12	194	.2	31	1
R L6+00S 4+50E	42	13	193	.3	32	2
R L6+00S 5+00E	71	11	86	.2	56	3
R L6+00S 5+50E	91	11	150	.1	33	1
R L6+00S 6+00E	43	10	171	.3	56	1
R L6+00S 6+50E	53	15	164	.3	54	2
R L6+00S 7+00E	51	13	158	.1	33	1
R L6+00S 7+50E	48	12	148	.1	26	1
R L6+00S 8+00E	38	8	103	.1	45	3
R L7+00S 0+50E	73	15	114	.2	42	1
R L7+00S 1+00E	51	6	126	.2	57	1
R L7+00S 1+50E	64	7	113	.1	63	1
R L7+00S 2+00E	79	16	157	.1	199	1
R L7+00S 2+50E	72	14	442	.1	120	1
R L7+00S 3+00E	66	15	314	.1	77	1
R L7+00S 3+50E	44	16	219	.1	29	1
R L7+00S 4+00E	69	17	340	.6	70	1
R L7+00S 4+50E	164	15	169	.1	19	1
R L7+00S 5+00E	75	11	146	.3	40	1
R L7+00S 5+50E	99	11	117	.2	66	1
R L7+00S 6+00E	45	17	286	.1	47	2
R L7+00S 6+50E	27	8	172	.1	18	1
R L7+00S 7+00E	50	10	143	.1	21	1
R L7+00S 7+50E	72	16	138	.2	29	1
R L7+00S 8+00E	104	7	148	.1	58	1
STD C/AU-S	62	37	136	7.3	67	49

SAMPLE#	Cu PPM	Pb PPM	Zn PPM	Ag PPM	Ni PPM	Au# PPB
R L8+00S 0+50E	113	6	100	.1	47	1
R L8+00S 1+00E	73	2	123	.1	57	1
R L8+00S 1+50E	78	8	134	.1	56	1
R L8+00S 2+00E	63	11	234	.2	67	2
R L8+00S 2+50E	122	9	266	.3	173	1
R L8+00S 3+00E	126	14	278	.6	133	1
R L8+00S 3+50E	102	17	322	.4	98	1
R L8+00S 4+50E	67	10	206	.2	35	1
R L8+00S 5+00E	98	10	143	.1	35	1
R L8+00S 5+50E	84	8	127	.5	31	2
R L8+00S 6+00E	78	13	157	.2	62	1
R L8+00S 6+50E	74	10	173	.2	48	1
R L8+00S 7+00E	53	7	271	.3	54	1
R L8+00S 8+00E	84	10	137	.3	24	1
R L9+00S 0+50E	128	16	120	.1	34	49
R L9+00S 1+00E	85	13	169	.2	46	1
R L9+00S 1+50E	51	13	227	.1	42	1
R L9+00S 2+00E	104	6	90	.1	94	1
R L9+00S 2+50E	74	9	102	.1	77	1
R L9+00S 3+00E	96	6	86	.1	98	1
R L9+00S 3+50E	90	7	135	.1	88	1
R L9+00S 4+00E	76	2	130	.3	106	2
R L9+00S 4+50E	56	12	200	.1	49	1
R L9+00S 5+00E	51	9	181	.1	39	1
R L9+00S 5+50E	105	7	128	.1	37	38
R L9+00S 6+00E	66	18	160	.1	36	1
R L9+00S 6+50E	94	14	120	.1	12	1
R L9+00S 7+00E	112	8	123	.2	25	1
R L9+00S 7+50E	127	12	174	.4	73	1
R L9+00S 8+00E	96	10	129	.2	151	1
R L10+00S 0+50E	116	11	111	.1	35	2
R L10+00S 1+00E	122	16	116	.1	44	1
R L10+00S 1+50E	54	13	93	.1	51	1
R L10+00S 2+00E	53	4	108	.2	40	1
R L10+00S 2+50E	86	5	97	.1	57	1
R L10+00S 3+00E	100	11	123	.1	76	1
STD C/AU-S	60	41	137	7.1	67	48

SAMPLE#	Cu PPM	Pb PPM	Zn PPM	Ag PPM	Ni PPM	Au# PPB
R L10+00S 3+50E	90	3	126	.1	102	1
R L10+00S 4+00E	83	9	92	.1	116	1
R L10+00S 4+50E	59	11	273	.1	49	1
R L10+00S 5+00E	106	12	123	.3	47	1
R L10+00S 5+50E	178	11	115	.3	49	1
R L10+00S 6+00E	81	16	113	.1	36	1
R L10+00S 6+50E	43	11	75	.1	75	1
R L10+00S 7+00E	155	9	122	.3	36	1
R L10+00S 7+50E	35	11	436	.1	43	2
R L10+00S 8+00E	85	22	360	.7	77	1
R L11+00S 1+00E	254	11	124	.1	45	3
R L11+00S 2+50E	209	13	247	.4	88	1
R L11+00S 3+00E	124	10	180	.3	107	4
R L11+00S 3+50E	107	17	137	.1	72	1
R L11+00S 4+00E	128	8	118	.2	56	1
R L11+00S 4+50E	79	13	311	.3	71	1
R L11+00S 5+00E	83	11	154	.3	49	1
R L11+00S 6+00E	146	11	104	.5	41	1
R L11+00S 6+50E	44	9	134	.1	36	2
R L11+00S 7+00E	111	17	139	.1	55	1
R L11+00S 7+50E	56	13	362	.1	63	1
R L11+00S 8+00E	84	13	246	.1	56	1
R L12+00S 0+50E	99	11	121	.1	46	1
R L12+00S 1+00E	131	15	97	.1	43	1
R L12+00S 2+00E	28	8	119	.1	50	6
R L12+00S 2+50E	69	10	167	.1	72	1
R L12+00S 3+00E	66	10	156	.1	65	46
R L12+00S 3+50E	70	14	184	.1	78	1
R L12+00S 4+00E	110	11	110	.1	107	1
R L12+00S 4+50E	84	8	96	.1	94	1
R L12+00S 5+00E	90	9	257	.3	85	1
R L12+00S 5+50E	85	7	156	.2	53	1
R L12+00S 6+00E	91	20	93	.1	40	1
R L12+00S 6+50E	93	7	151	.2	57	1
R L12+00S 7+00E	50	11	120	.1	62	2
R L12+00S 7+50E	130	11	134	.2	67	1
STD C/AU-S	62	39	138	7.1	68	47

SAMPLE#	Cu PPM	Pb PPM	Zn PPM	Ag PPM	Ni PPM	Au# PPB
R L12+00S 8+00E	92	5	187	.1	37	1
R L13+00S 1+00E	74	6	146	.1	29	2
R L13+00S 1+50E	44	6	95	.1	43	73
R L13+00S 2+00E	64	9	207	.2	57	3
R L13+00S 2+50E	64	8	337	.1	67	1
R L13+00S 3+00E	66	2	122	.1	56	2
R L13+00S 3+50E	71	14	135	.1	73	5
R L13+00S 4+50E	58	6	125	.1	47	2
R L13+00S 5+00E	36	3	108	.1	37	3
R L13+00S 5+50E	47	8	97	.1	87	6
R L13+00S 6+00E	352	15	260	.4	74	6
R L13+00S 6+50E	39	2	19	.1	4	2
R L13+00S 7+00E	137	14	131	.1	66	2
R L13+00S 8+00E	132	11	125	.2	58	1
R L14+00S 7+50W	97	7	225	.3	46	3
R L15+00S 8+00W	158	12	125	.1	30	1
R L15+00S 2+50W	339	15	118	.1	31	36
R L17+00S 7+50W	67	15	229	.3	40	1
R L17+00S 1+00W	29	7	113	.1	32	24
R L17+00S 0+50E	15	7	247	.1	33	1
R L17+00S 1+00E	21	8	99	.1	38	1
R L17+00S 1+50E	32	5	107	.1	37	9
R L17+00S 2+00E	37	8	306	.2	45	18
R L17+00S 2+50E	53	4	225	.2	48	2
R L17+00S 3+00E	73	9	76	.2	53	2
R L17+00S 4+00E	115	9	189	.2	73	1
R L17+00S 4+50E	67	11	295	.1	88	1
R L17+00S 5+00E	13	6	50	.1	18	1
R L17+00S 5+50E	25	8	98	.1	28	2
R L17+00S 7+00E	479	19	148	.5	32	3
R L17+00S 7+50E	95	11	87	.1	29	1
STD C/AU-S	62	40	137	7.2	68	52

SAMPLE#	Cu PPM	Pb PPM	Zn PPM	Ag PPM	As PPM	Au# PPB
R L1S 4+25E	54	17	113	.2	4	1
R L1S 4+50E	25	13	134	.1	2	1
R L1S 4+75E	22	13	150	.1	3	2
R L1+50S 3+25W	53	11	129	.1	4	1
R L1+50S 3+00W	39	10	87	.1	2	9
R L1+50S 2+75W	66	13	125	.2	2	2
R L1+50S 2+50W	45	6	96	.1	2	1
R L1+50S 2+25W	78	10	113	.1	6	50
R L1+50S 2+00W	29	6	132	.2	2	23
R L1+50S 1+75W	44	10	233	.2	4	2
R L1+50S 1+50W	40	10	173	.2	3	1
R L1+50S 1+00W	155	10	107	.1	7	4
R L1+50S 0+50W	25	9	85	.2	5	3
R L1+50S 0+00W	33	8	109	.2	2	2
R L1+50S 4+50E	39	10	77	.3	2	6
R L1+50S 4+75E	30	10	89	.1	2	5
R L1+50S 5+00E	29	4	80	.1	5	9
R L2S 3+25W	33	10	143	.1	5	1
R L2S 3+00W	58	8	120	.2	8	2
R L2S 2+75W	56	8	105	.1	8	36
R L2S 2+50W	33	10	129	.2	3	1
R L2S 2+00W	45	7	143	.2	5	27
R L2S 1+75W	48	9	150	.2	7	3
R L2S 1+50W	53	6	128	.1	10	1
R L2S 1+00W	28	10	143	.1	7	13
R L2S 0+50W	42	9	92	.2	5	34
R L2S 0+00W	45	7	125	.2	7	27
R L2S 4+75E	33	8	119	.1	3	1
R L2S 5+00E	37	9	107	.1	9	4
R L2S 5+25E	49	12	105	.2	6	2
R L2+50S 3+25W	33	8	134	.2	3	1
R L2+50S 3+00W	27	6	201	.3	4	3
R L2+50S 2+75W	54	7	100	.2	6	5
R L2+50S 2+50W	33	7	133	.2	2	8
R L2+50S 2+25W	46	8	117	.2	5	5
R L2+50S 2+00W	41	5	127	.2	2	10
STD C/AU-S	58	37	133	7.1	36	50

SAMPLE#	Cu PPM	Pb PPM	Zn PPM	Ag PPM	As PPM	Au# PPB
R L2+50S 1+75W	50	12	123	.2	4	17
R L2+50S 1+50W	29	13	172	.3	5	1
R L2+50S 1+00W	48	14	131	.2	8	2
R L2+50S 0+50W	37	11	130	.3	4	205
R L2+50S 0+00S	51	12	110	.2	8	4
STD C/AU-S	57	40	130	7.1	42	52

SAMPLE#	Cu PPM	Pb PPM	Zn PPM	Ag PPM	Ni PPM	Au# PPB
R 0+75S 2+25E	28	10	148	.4	55	4
R 0+75S 2+50E	20	4	97	.4	35	2
R 0+75S 2+75E	18	10	140	.3	33	1
R 0+75S 3+00E	18	8	161	.2	25	3
R 1+00S 2+25E	50	8	125	.2	48	8
R 1+00S 2+50E	39	8	140	.3	50	4
R 1+00S 2+75E	32	10	128	.3	44	1
R 1+00S 3+00E	24	8	176	.2	45	4
R 1+50S 2+25E	37	14	129	.2	34	3
R 1+50S 2+50E	27	6	98	.2	42	4
R 1+50S 2+75E	34	9	130	.2	28	3
R 1+50S 3+00E	64	9	149	.3	95	132
R 1+50S 3+25E	36	11	112	.2	32	6
R 1+50S 3+50E	65	16	118	.5	37	1
R 2+00S 2+75E	49	6	152	.4	62	1
R 2+00S 3+00E	64	10	150	.3	92	175
R 2+00S 3+25E	41	10	118	.1	30	7
R 2+00S 3+50E	42	9	74	.3	23	1
R 2+00S 3+75E	22	12	163	.1	19	1
R 2+25S 3+00E	59	12	118	.4	34	1
R 2+25S 3+25E	25	10	129	.2	27	1
R 2+25S 3+50E	57	10	105	.4	32	1
R 2+25S 3+75E	20	12	164	.1	21	1
STD C/AU-S	57	40	130	6.9	66	53

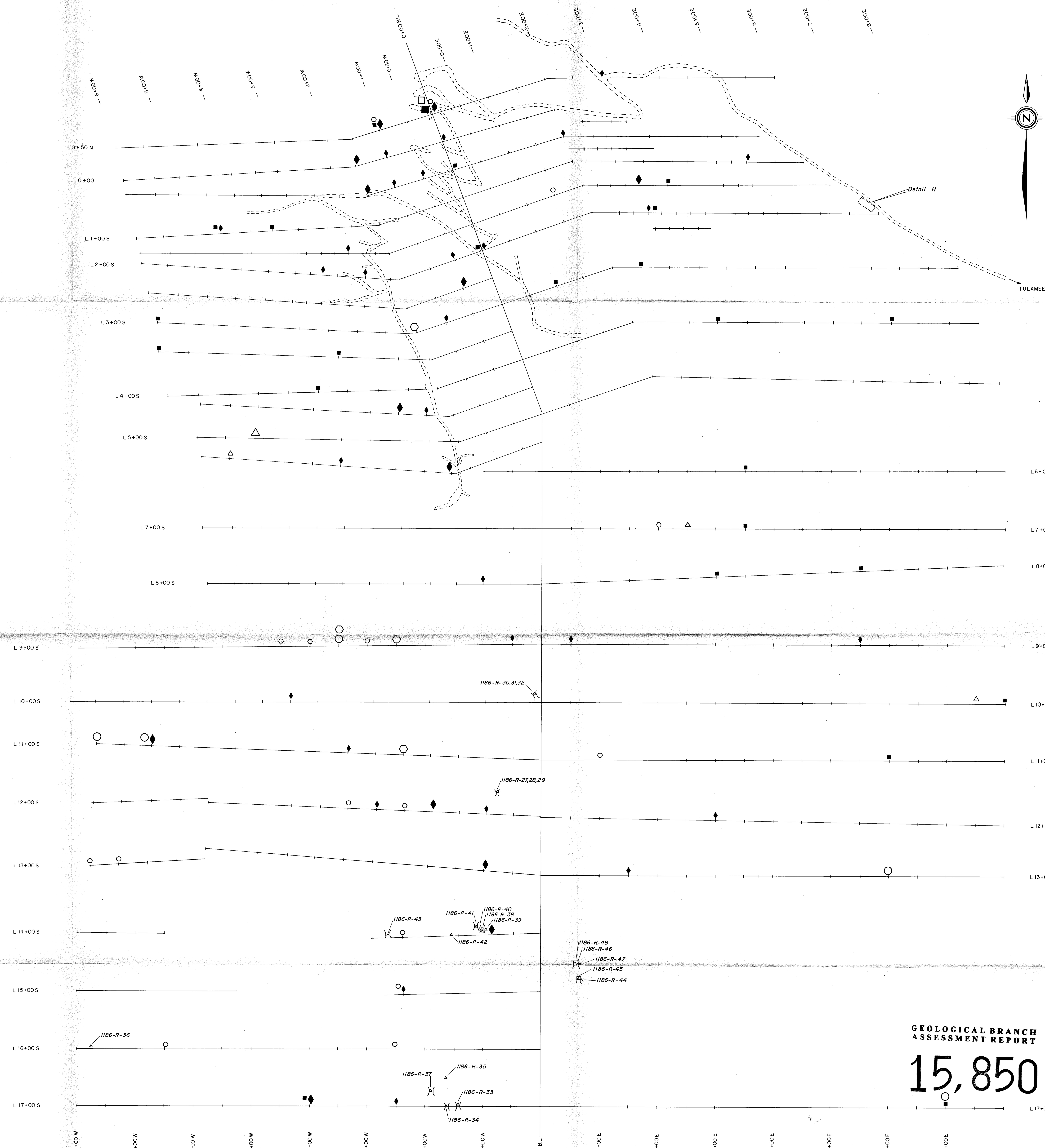

Anomalous Geochem. Results

	Weakly Anomalous	Highly Anomalous
Au (ppb)	♦	♦
Ag (ppm)	■	■
Cu (ppm)	○	○
Pb (ppm)	□	□
Zn (ppm)	△	△
Ni (ppm)	⬡	⬡

LEGEND

- ROAD
- STATION AND SAMPLE LOCATION
- CREEK
- 1186-R-37 ROCK SAMPLE LOCALITY
- TRENCHING
- ADIT

SCALE 1: 2500
0 50 100 150 200 250 Metres

GEOLOGICAL BRANCH
ASSESSMENT REPORT

15,850

L. Christenson

FIGURE 18

TWIN EAGLE RESOURCES INC.

GOLD MOUNT CLAIM GROUP
SIMILKAMEEN M.D., – TULAMEEN, B.C.

SOILS GEOCHEMISTRY
ANOMALY MAP

To accompany a report by: L. Christenson, M. Sc.
Drawn by: LC/GT
Date: January, 1987

STRATO GEOLOGICAL ENGINEERING LTD.

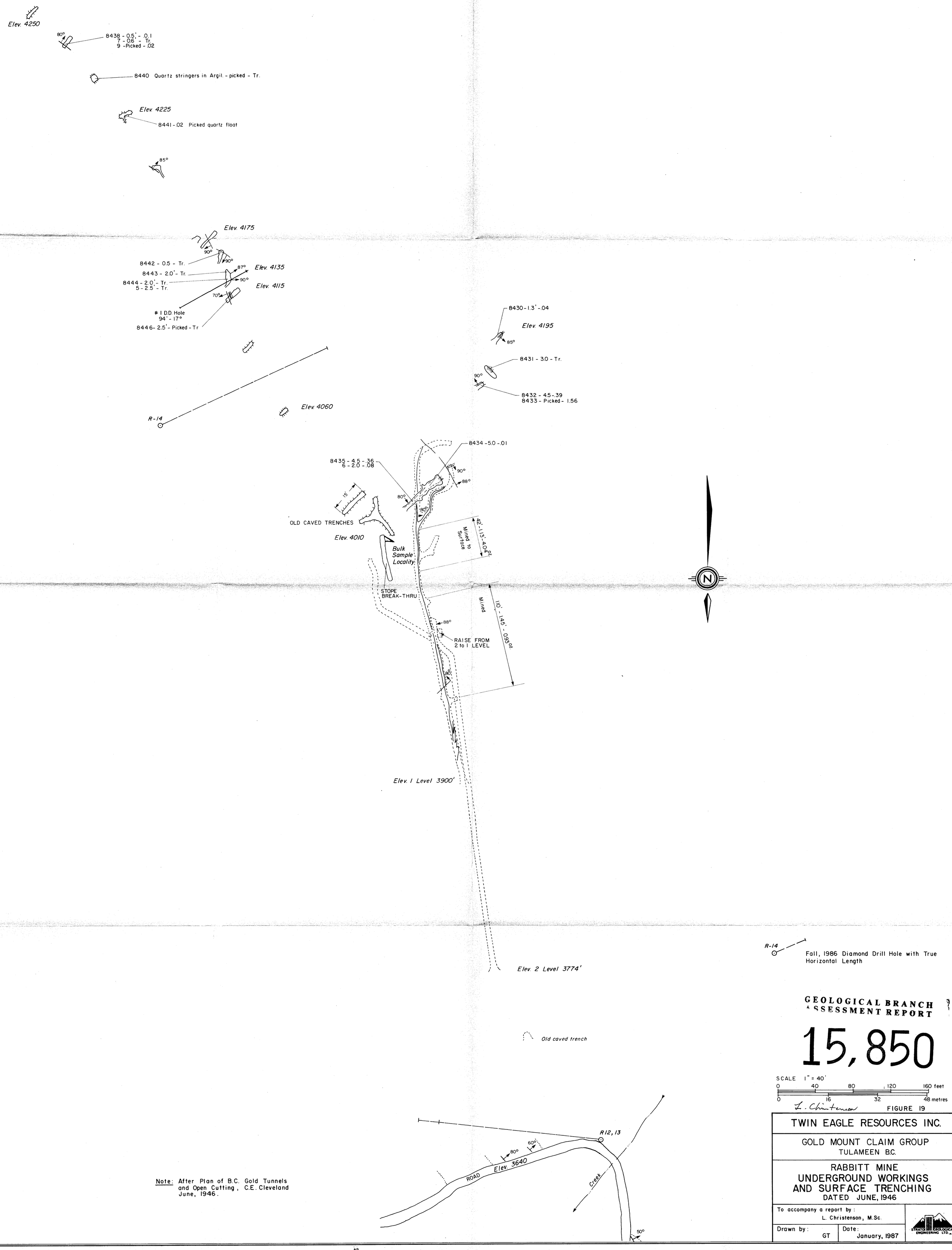

Note: After Plan of B.C. Gold Tunnels and Open Cutting, C.E. Cleveland June, 1946.

GEOLOGICAL BRANCH
ASSESSMENT REPORT

15,850

SCALE 1" = 40'
0 40 80 120 160 feet
0 16 32 48 metres

L. Christenson

FIGURE 19

TWIN EAGLE RESOURCES INC.

GOLD MOUNT CLAIM GROUP
TULAMEEN B.C.

RABBITT MINE
UNDERGROUND WORKINGS
AND SURFACE TRENCHING
DATED JUNE, 1946

To accompany a report by:
L. Christenson, M.Sc.

Drawn by: GT

Date: January, 1987

STRATO GEOLOGICAL ENGINEERING LTD.

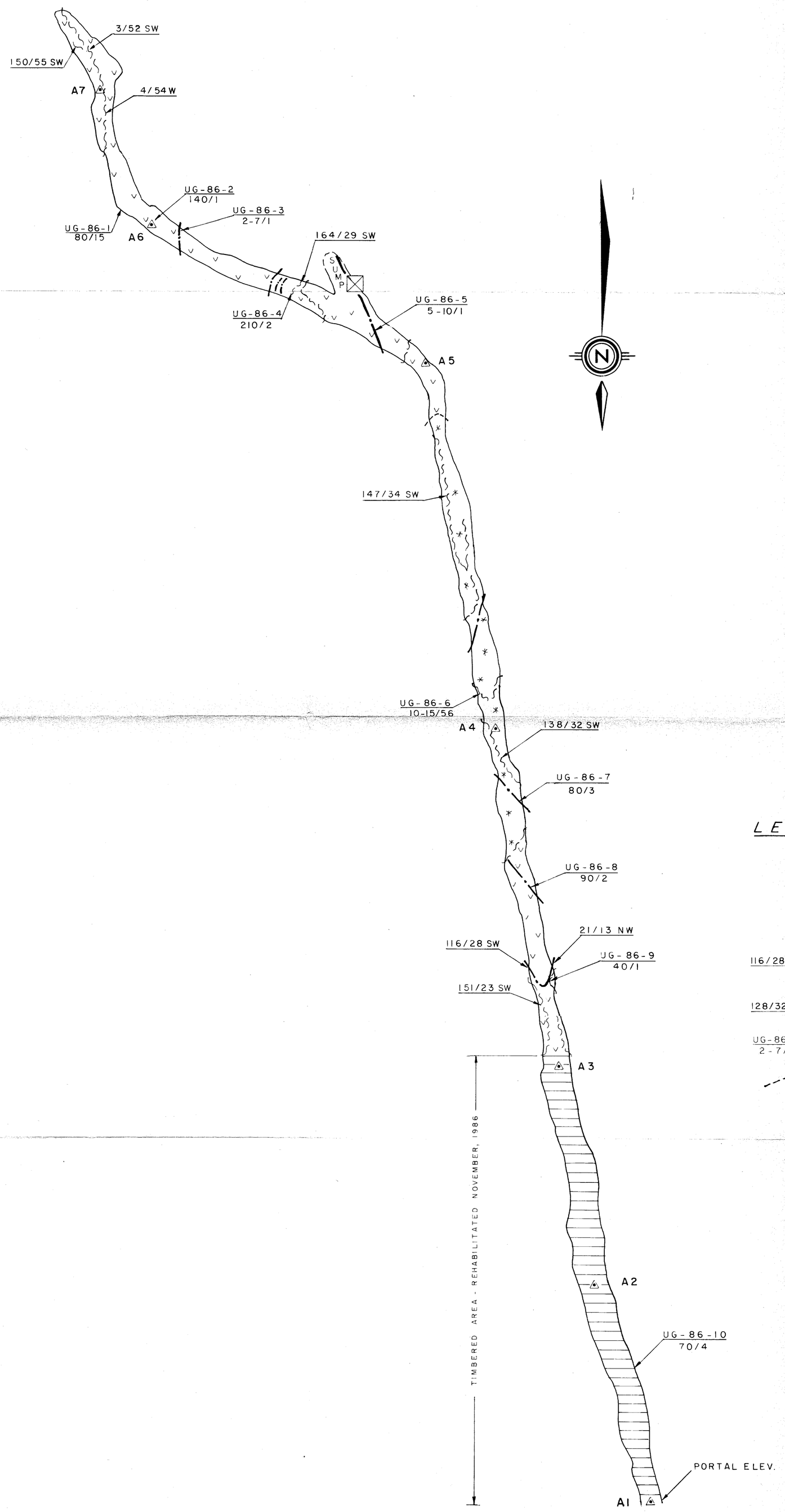

LEGEND

NICOLA GROUP

- ANDESITE - very fine-grained, phaneritic feldspar ± pyroxene, trace to minor fine-grained disseminated pyrite
- FLOWER PORPHYRY - Andesite as above with feldspar glomerocrysts
- 116/28 SW — QUARTZ VEIN WITH STRIKE/DIP
- 128/32 SW — FAULT WITH STRIKE/DIP
- UG-86-3 / 2-7/1 — ROCK SAMPLE - WIDTH (CENTIMETRES)/Au (ppb)
- GEOLOGIC CONTACT
- RAISE TO NUMBER ONE LEVEL
- A6 — SURVEY STATION

0 2 4 6 8 10

SCALE 1:200 - metres

L. Christenson

FIGURE 20

TWIN EAGLE RESOURCES INC.

GOLD MOUNT CLAIM GROUP
SIMILKAMEEN M.D., N.T.S. 92H/10W

RABBITT MINE
NUMBER 2 LEVEL
PLAN VIEW

To accompany a report by:
L. Christenson, M.Sc.

Drawn by: PB / S.W.

Dated: February, 1987

STRATO GEOLOGICAL ENGINEERING LTD.

GEOLOGICAL BRANCH
ASSESSMENT REPORT
15,850